# EANCOM® 2002 S4

# IFCSUM

# Forwarding and consolidation summary message

# Edition 2016

2. Message Structure Chart ..... 4
3. Branching Diagram..... 7
4. Segments Description ..... 17
5. Segments Layout..... 25
6. Example(s) ..... 133

## 1. Introduction

**Status**

MESSAGE TYPE : IFCSUM

REFERENCE DIRECTORY : D.01B

EANCOM® SUBSET VERSION : 004

**Definition**

A message from the party issuing either an instruction or a booking regarding forwarding/transport services for a collection of consignments under conditions agreed, to the party arranging the forwarding and/or transport services. The IFCSUM message can also be used as an arrival notice for multiple consignments.

**Principles**

This message should not be used to instruct the despatch of products. The 'Instruction To Despatch (INSDES)' message should be used for this purpose.

The instruction results in a transport contract for multiple consignments and is primarily meant for administrative purposes. It will be the message from shipper to carrier or forwarder containing the final details of the consignments for which services are provided. The instruction message is the one and only message which results in the actual contract which can either be a document or an electronic contract.

If only one message will suffice in an exchange between a shipper and a carrier/forwarder to convey the information related to multiple consignments then the instruction message should be the one as this message is the only message that results in a contract.

IFCSUM focuses on separate business areas in transport where the view on the operations is transport means or equipment oriented rather than consignment oriented. The IFCSUM provides a statement for a means of transport or equipment regarding the consignments carried. The IFCSUM message also provides a means to incorporate the control and auditability information needed for the receiver of the message to perform the operation to be carried out.

IFCSUM can be used in the distribution industry as the description of all consignments to be collected together at one location and to be delivered to possibly different locations

The message provides information concerning cargo carried specifying the details regarding carrier, mode of transport, means of transport, equipment and the necessary details of the consignments.

In addition to the main principles detailed above, a number of general principles also apply;

The IFCSUM message may contain one or many consignments.

- A consignment may contain several goods items.
- A consignment is identified by a consignors reference number (code CU) in the CNI segment.
- Goods items may or may not be containerised.
- Goods items may be transported in one or more containers, and a single container may contain one or more goods items.
- One goods item may be related to one or more customs tariff codes.
- Goods items related to one customs tariff code may be carried in one or more containers.
- Transport devices, which have the ability of powered movement on their own, are specified in the transport details group. Other load or transport devices are specified as equipment.
- Packaging for goods items can be expressed at up to three levels.
- A goods item consists of one or more despatch units that adhere to the same package type and goods

## 1. Introduction

description.

- A despatch unit is the unit of cargo that will be handled and to which an SSCC can be affixed.

The IFCSUM message can also be used as an arrival notice.

A number of generic transport terms are used in this specification, to be described as:

**CONSIGNEE**
the organisation (party) which has the intention to receive the goods.

**CONSIGNOR**
the party ordering transport, orders a carrier to collect goods for transportation.

**CONSIGNMENT**
a collection of goods items to be transported from one or many despatch locations to one or many delivery locations. (synonym: shipment).

**CARRIER**
the party contracted by the consignor or forwarder to transport goods.

**DESPATCH LOCATION**
the physical location from which goods for transport are shipped.

**DELIVERY LOCATION**
the physical location to which goods for transport are finally delivered.

**EQUIPMENT**
material resources necessary to facilitate the transport and handling of cargo. Transport equipment does under the given circumstances not have the ability to move by its own propulsion (e.g. sea container, trailer, unit load device, pallet).

**FORWARDER**
the party contracted by the consignor to arrange to have the goods transported.

**GOODS ITEM**
a collection of products normally grouped together for transport purposes, e.g. 12 pallets of foodstuffs.

**LINE ITEM**
a specific product identified and defined for **trade** purposes, e.g. a case of flour containing 24 packets of 250 grams.

**MODE OF TRANSPORT**
the method of transport used for the conveyance of goods or persons, e.g. by rail, by road, by sea.

**MEANS OF TRANSPORT**
the vehicle used for the transport of goods or persons, e.g. aircraft, truck, vessel.

**PLACE OF ACCEPTANCE**
the place at which the responsibility of the carrier starts.

**PLACE OF DELIVERY**
the place at which the responsibility of the carrier ends.

**TYPE OF MEANS OF TRANSPORT**
the type of vehicle used in the transport process, e.g. wide body, tank truck, passenger vessel.

**TYPE OF EQUIPMENT**
the type of material used, e.g. 40 feet container, four way pallet, mafi trailer.

## 2. Message Structure Chart

**Forwarding And Consolidation Summary Heading Section**

| | | | | | |
|---|---|---|---|---|---|
| UNH | | 1 | M | 1 | - Message header |
| BGM | | 2 | M | 1 | - Beginning of message |
| DTM | | 3 | C | 9 | - Date/time/period |
| FTX | | 4 | C | 99 | - Free text |
| CNT | | 5 | C | 9 | - Control total |
| SG1 | | | C | 9 | - RFF-DTM |
| RFF | | 6 | M | 1 | - Reference |
| DTM | | 7 | C | 9 | - Date/time/period |
| SG4 | | | C | 9 | - NAD |
| NAD | | 8 | M | 1 | - Name and address |
| SG7 | | | C | 9 | - TCC-CUX |
| TCC | | 9 | M | 1 | - Charge/rate calculations |
| CUX | | 10 | C | 1 | - Currencies |
| SG9 | * | | C | 9 | - TDT-TSR-SG10-SG16 |
| TDT | | 11 | M | 1 | - Details of transport |
| TSR | | 12 | C | 9 | - Transport service requirements |
| SG10 | | | C | 9 | - LOC-DTM |
| LOC | | 13 | M | 1 | - Place/location identification |
| DTM | | 14 | C | 9 | - Date/time/period |
| SG16 | | | C | 9 | - NAD-LOC-SG17-SG18 |
| NAD | | 15 | M | 1 | - Name and address |
| LOC | | 16 | C | 9 | - Place/location identification |
| SG17 | | | C | 9 | - CTA-COM |
| CTA | | 17 | M | 1 | - Contact information |
| COM | | 18 | C | 9 | - Communication contact |
| SG18 | | | C | 9 | - DOC-DTM |
| DOC | | 19 | M | 1 | - Document/message details |
| DTM | | 20 | C | 1 | - Date/time/period |
| SG21 | | | C | 999 | - EQD-EQN-SEL-NAD |
| EQD | | 21 | M | 1 | - Equipment details |
| EQN | | 22 | C | 1 | - Number of units |
| SEL | | 23 | C | 9 | - Seal number |
| NAD | | 24 | C | 9 | - Name and address |
| SG25 | | | C | 9999 | - CNI-DTM-CNT-TSR-MOA-FTX-SG31-SG32-SG33-SG38-SG43-SG5 |
| CNI | | 25 | M | 1 | - Consignment information |
| DTM | | 26 | C | 9 | - Date/time/period |
| CNT | | 27 | C | 9 | - Control total |
| TSR | | 28 | C | 9 | - Transport service requirements |
| MOA | | 29 | C | 99 | - Monetary amount |
| FTX | | 30 | C | 99 | - Free text |
| SG31 | | | C | 2 | - TOD-LOC |
| TOD | | 31 | M | 1 | - Terms of delivery or transport |
| LOC | | 32 | C | 9 | - Place/location identification |
| SG32 | | | C | 999 | - RFF-DTM |
| RFF | | 33 | M | 1 | - Reference |
| DTM | | 34 | C | 9 | - Date/time/period |
| SG33 | + | | C | 9 | - GOR-DTM-LOC-SEL-FTX-SG34 |
| GOR | + | 35 | M | 1 | - Governmental requirements |
| DTM | + | 36 | C | 9 | - Date/time/period |
| LOC | + | 37 | C | 9 | - Place/location identification |
| SEL | + | 38 | C | 9 | - Seal number |
| FTX | + | 39 | C | 9 | - Free text |
| SG34 | + | | C | 9 | - DOC-DTM |
| DOC | + | 40 | M | 1 | - Document/message details |
| DTM | + | 41 | C | 1 | - Date/time/period |
| SG38 | + | | C | 99 | - TDT-DTM-SG39-SG40 |
| TDT | + | 42 | M | 1 | - Details of transport |

## 2. Message Structure Chart

| | | | | | |
|---|---|---|---|---|---|
| DTM | + | 43 | C | 9 | - Date/time/period |
| SG39 | + | | C | 99 | - LOC-DTM |
| LOC | + | 44 | M | 1 | - Place/location identification |
| DTM | + | 45 | C | 9 | - Date/time/period |
| SG40 | + | | C | 9 | - RFF-DTM |
| RFF | + | 46 | M | 1 | - Reference |
| DTM | + | 47 | C | 1 | - Date/time/period |
| SG43 | * | | C | 99 | - NAD-LOC-MOA-SG44-SG45-SG47 |
| NAD | | 48 | M | 1 | - Name and address |
| LOC | | 49 | C | 9 | - Place/location identification |
| MOA | + | 50 | C | 9 | - Monetary amount |
| SG44 | | | C | 9 | - CTA-COM |
| CTA | | 51 | M | 1 | - Contact information |
| COM | | 52 | C | 9 | - Communication contact |
| SG45 | | | C | 9 | - DOC-DTM |
| DOC | | 53 | M | 1 | - Document/message details |
| DTM | | 54 | C | 1 | - Date/time/period |
| SG47 | | | C | 9 | - RFF |
| RFF | | 55 | M | 1 | - Reference |

**Forwarding and Consolidation Detail Section**

| | | | | | |
|---|---|---|---|---|---|
| SG50 | * | | C | 999 | - GID-HAN-TMP-RNG-MOA-PIA-FTX-SG51-GDS-SG52-SG53-SG54- |
| GID | | 56 | M | 1 | - Goods item details |
| HAN | | 57 | C | 1 | - Handling instructions |
| TMP | | 58 | C | 1 | - Temperature |
| RNG | | 59 | C | 1 | - Range details |
| MOA | | 60 | C | 9 | - Monetary amount |
| PIA | | 61 | C | 9 | - Additional product id |
| FTX | | 62 | C | 9 | - Free text |
| SG51 | | | C | 9 | - NAD-DTM |
| NAD | | 63 | M | 1 | - Name and address |
| DTM | | 64 | C | 1 | - Date/time/period |
| GDS | + | 65 | C | 9 | - Nature of cargo |
| SG52 | | | C | 99 | - MEA-EQN |
| MEA | | 66 | M | 1 | - Measurements |
| EQN | | 67 | C | 1 | - Number of units |
| SG53 | | | C | 99 | - DIM-EQN |
| DIM | | 68 | M | 1 | - Dimensions |
| EQN | | 69 | C | 1 | - Number of units |
| SG54 | | | C | 9 | - RFF-DTM |
| RFF | | 70 | M | 1 | - Reference |
| DTM | | 71 | C | 9 | - Date/time/period |
| SG55 | | | C | 999 | - PCI-GIN |
| PCI | | 72 | M | 1 | - Package identification |
| GIN | | 73 | C | 9 | - Goods identity number |
| SG56 | | | C | 9 | - DOC-DTM |
| DOC | | 74 | M | 1 | - Document/message details |
| DTM | | 75 | C | 9 | - Date/time/period |
| SG61 | | | C | 999 | - SGP |
| SGP | | 76 | M | 1 | - Split goods placement |
| SG65 | | | C | 99 | - DGS-FTX-SG66-SG67 |
| DGS | | 77 | M | 1 | - Dangerous goods |
| FTX | | 78 | C | 99 | - Free text |
| SG66 | | | C | 9 | - CTA-COM |
| CTA | | 79 | M | 1 | - Contact information |
| COM | | 80 | C | 9 | - Communication contact |
| SG67 | | | C | 9 | - MEA-EQN |
| MEA | | 81 | M | 1 | - Measurements |
| EQN | | 82 | C | 1 | - Number of units |

## 2. Message Structure Chart

| | | | | |
|---|---|---|---|---|
| SG70 | | C | 999 | - EQD-EQN-MEA-DIM-SEL-SG72 |
| EQD | 83 | M | 1 | - Equipment details |
| EQN | 84 | C | 1 | - Number of units |
| MEA | 85 | C | 9 | - Measurements |
| DIM | 86 | C | 9 | - Dimensions |
| SEL | 87 | C | 99 | - Seal number |
| SG72 | | C | 9 | - NAD |
| NAD | 88 | M | 1 | - Name and address |

**Forwarding And Consolidation Summary Section**

| | | | | |
|---|---|---|---|---|
| UNT | 89 | M | 1 | - Message trailer |

## 3. Branching Diagram

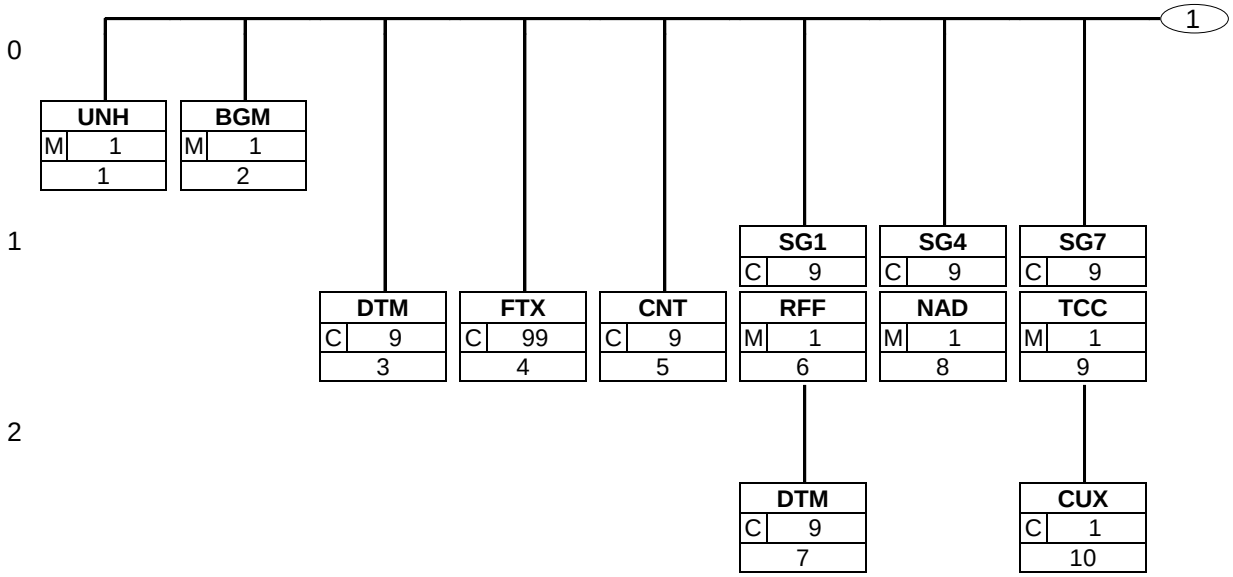

## 3. Branching Diagram

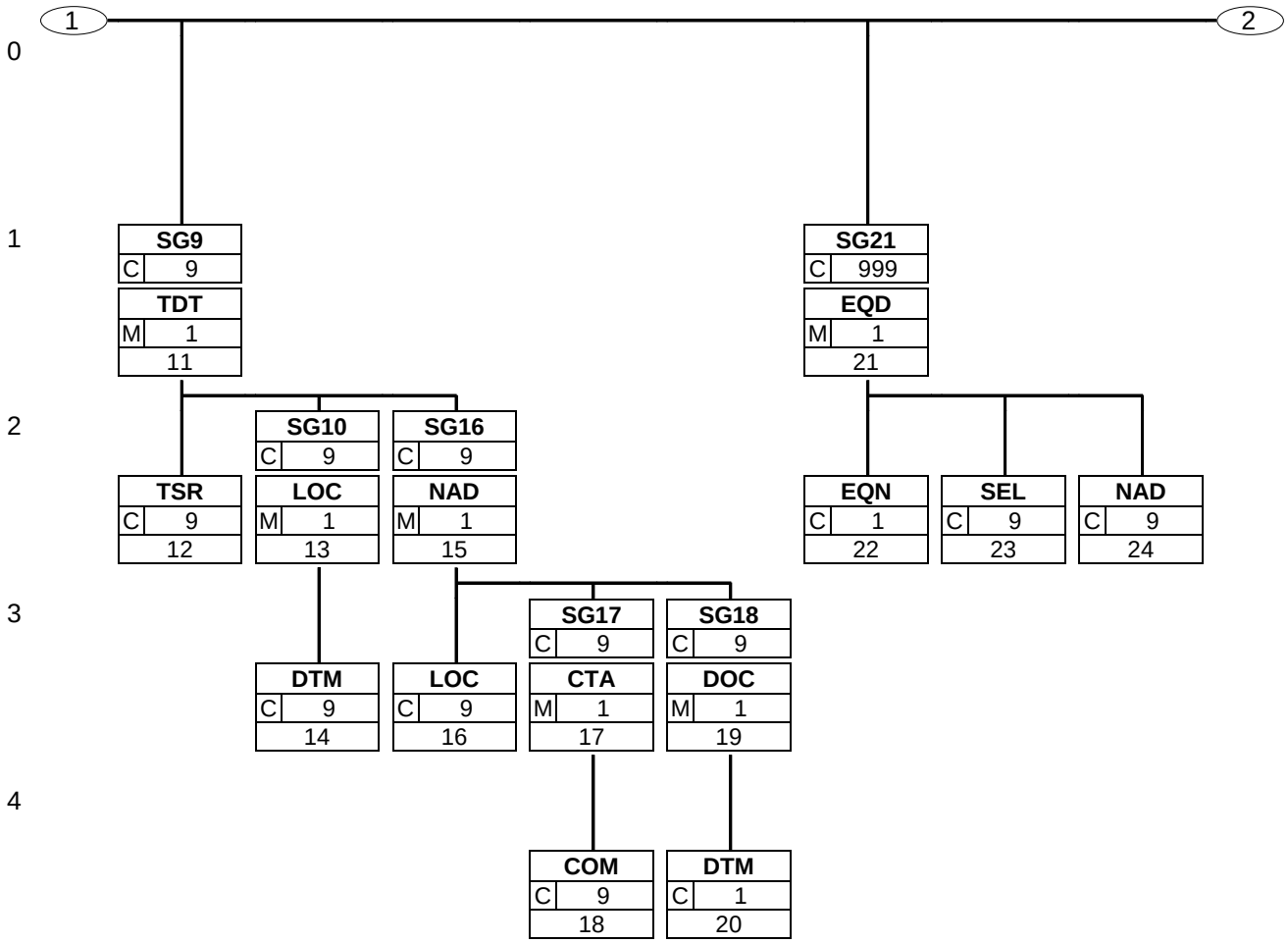

## 3. Branching Diagram

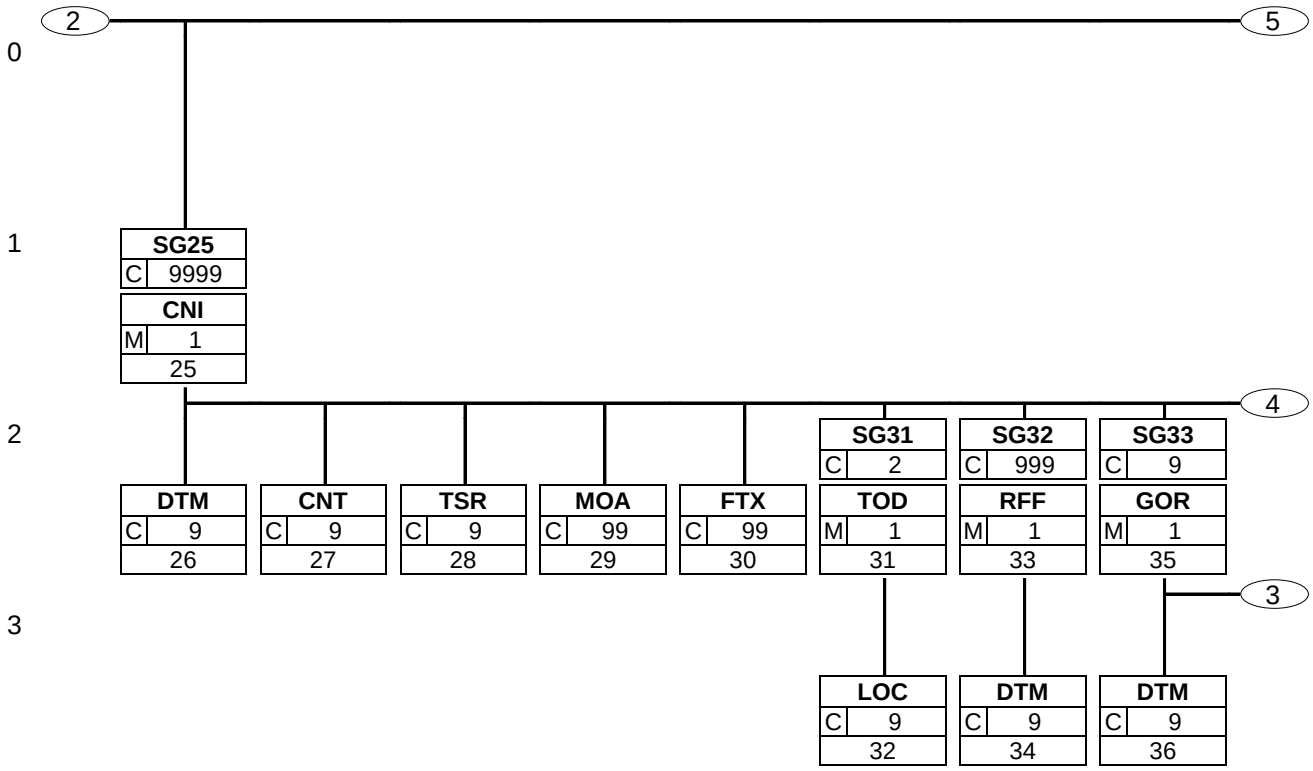

## 3. Branching Diagram

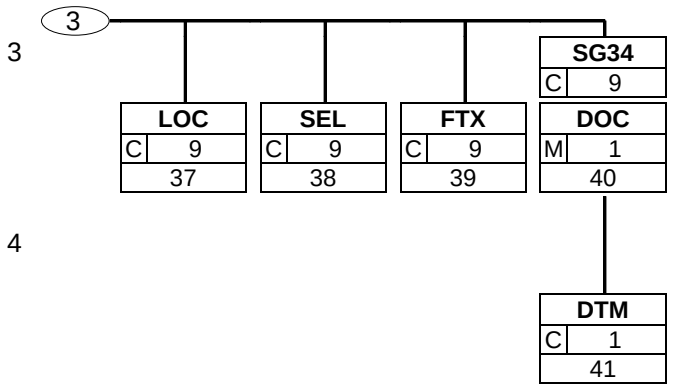

## 3. Branching Diagram

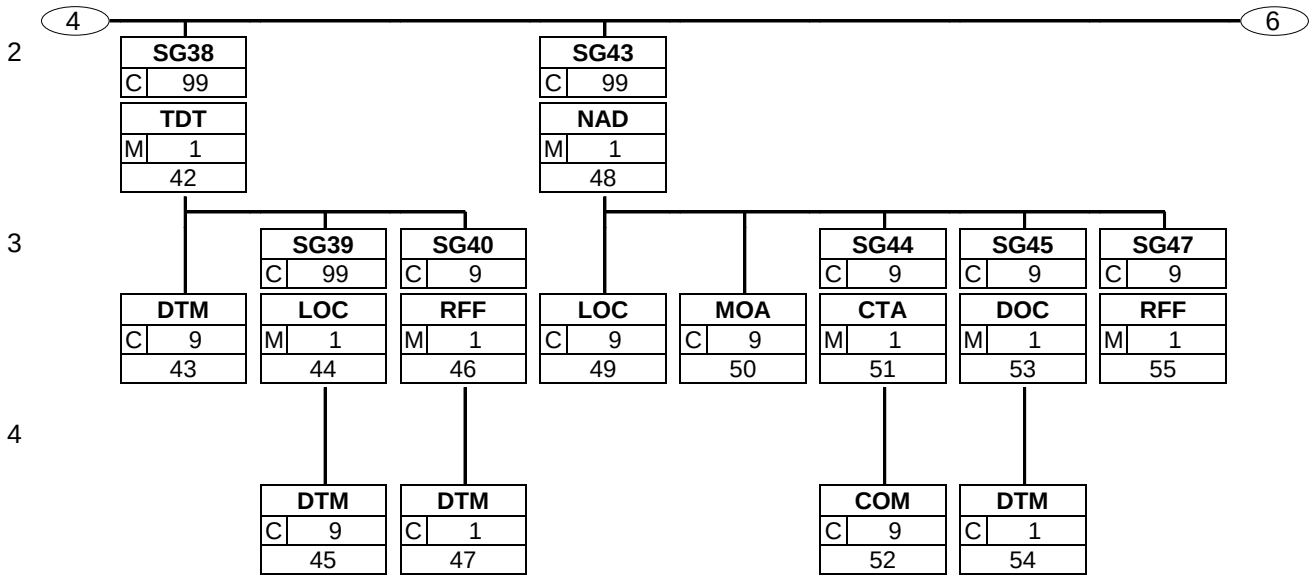

## 3. Branching Diagram

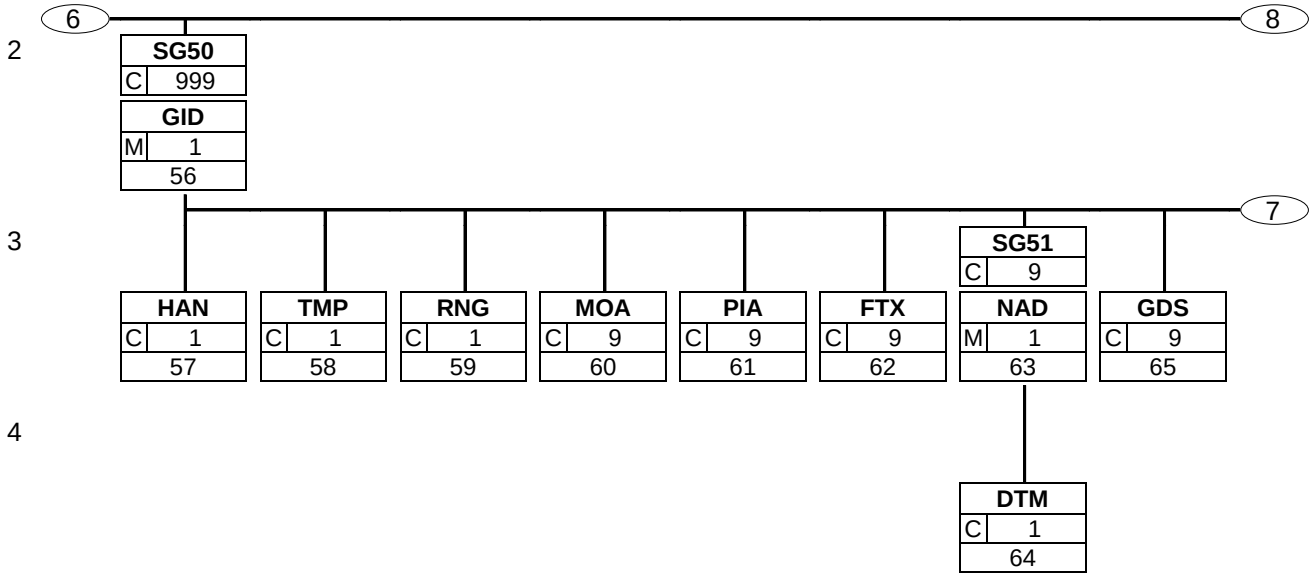

## 3. Branching Diagram

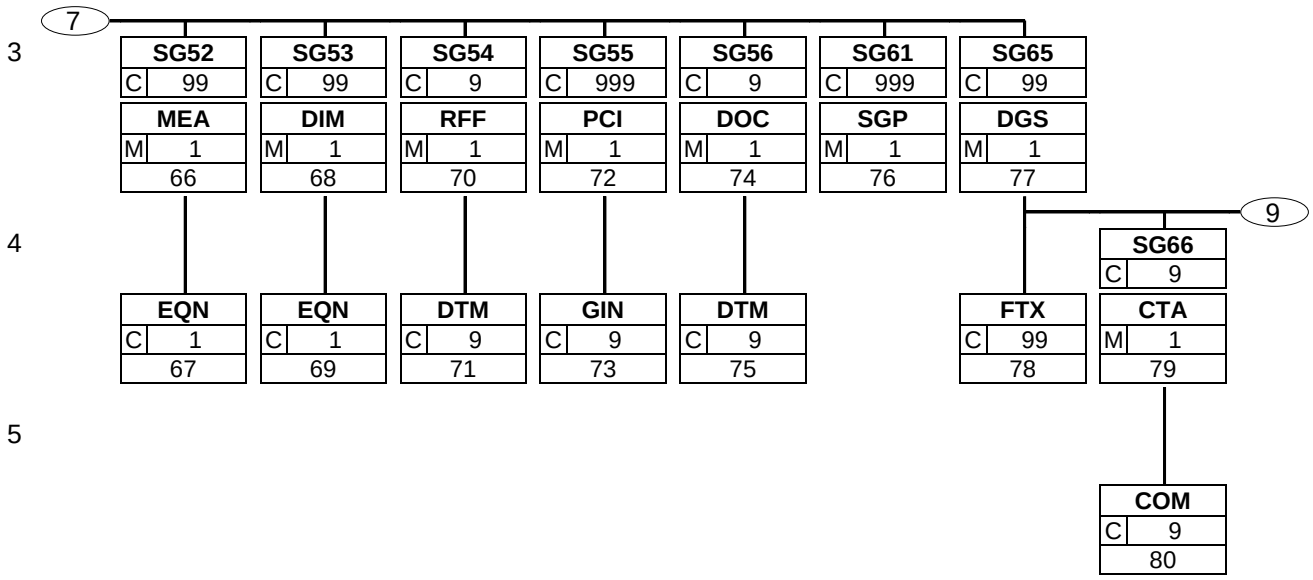

## 3. Branching Diagram

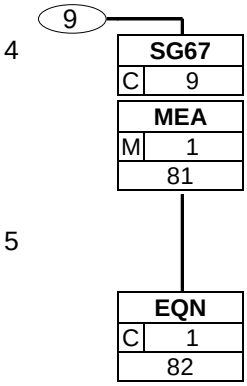

## 3. Branching Diagram

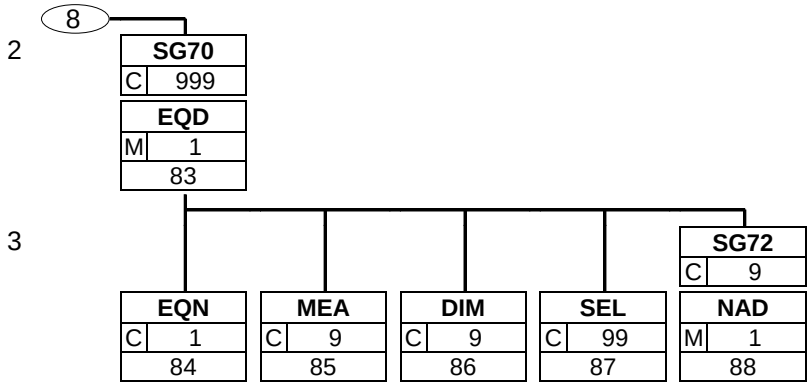

## 3. Branching Diagram

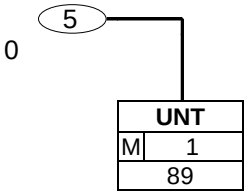

## 4. Segments Description

**Forwarding And Consolidation Summary Heading Section**

UNH - M 1 - Message header

This segment is used to head, identify and specify a message.

BGM - M 1 - Beginning of message

This segment is used to indicate the type and function of a message and to transmit the identifying number.

DTM - C 9 - Date/time/period

This segment is used to specify the dates related to the Forwarding and Consolidation Summary message.

FTX - C 99 - Free text

This segment is used to provide free form or coded text information related to the entire message.

CNT - C 9 - Control total

This segment is used to provide message control information such as the total number of consignments in the consolidation, the total gross weight of the consolidated consignments.

**SG1** - C 9 - **RFF-DTM**

A group of segments containing references and constants which apply to the entire message.

RFF - M 1 - Reference

This segment is used to specify references which are related to the complete message.

DTM - C 9 - Date/time/period

This segment is used to specify the date of the reference specified in the previous RFF segment.

**SG4** - C 9 - **NAD**

A group of segments to identify a party and related contacts and references.

NAD - M 1 - Name and address

This NAD segment can be used to identify parties independently of the details of transport in SG9.

**SG7** - C 9 - **TCC-CUX**

A group of segments to specify charges associated with the transport of the consolidation.

TCC - M 1 - Charge/rate calculations

This segment enables the transmission of the freight rate.

CUX - C 1 - Currencies

This segment is used to specify currency information for the freight calculation.

**SG9** - C 9 - **TDT-TSR-SG10-SG16**

A group of segments to describe all transport details of the voyage/flight or consolidation and of all parties involved.

TDT - M 1 - Details of transport

This segment is used to specify transport services required to transport the complete consolidated consignment. The message should be used to provide only one transport stage and therefore this segment group is only repeated once per message.

TSR - C 9 - Transport service requirements

This segment is used to indicate any special contracts, services or priorities in relation to the transport of the consolidated consignment.

## 4. Segments Description

**SG10** - C 9 - **LOC-DTM**

A group of segments identifying the relevant locations aswell as date(s) and time(s) related to the transport stage.

LOC - M 1 - Place/location identification

This segment is used to identify locations related to the transport details for the consolidated consignment.

DTM - C 9 - Date/time/period

This segment is used to specify dates relating to the transport details for the consolidated consignment.

**SG16** - C 9 - **NAD-LOC-SG17-SG18**

A group of segments to specify the parties related to the specified transport stage.

NAD - M 1 - Name and address

This segment is used to identify the parties involved in the Forwarding and Consolidation Summary message. Identification of the Consignor and Carrier or Freight Forwarder is mandatory in the Forwarding and Consolidation Summary message.

LOC - C 9 - Place/location identification

This segment is used to identify locations related to the party identified in the NAD segment.

**SG17** - C 9 - **CTA-COM**

A group of segments to indicate contacts related to the party.

CTA - M 1 - Contact information

This segment is used to identify department and contact names within the party specified in the NAD segment.

COM - C 9 - Communication contact

This segment identifies the communications number and type of communications for the person or department identified in the previous CTA segment.

**SG18** - C 9 - **DOC-DTM**

A group of segments to specify a document related to the party.

DOC - M 1 - Document/message details

This segment is used to identify any documentation which must accompany the consolidated consignment.

DTM - C 1 - Date/time/period

This segment is used to specify any dates related to the previous DOC segment.

**SG21** - C 999 - **EQD-EQN-SEL-NAD**

A group of segments to specify equipment in which consignments are transported (e.g. trailer, railway wagon, ULD, etc.). This segment group WILL NOT be used in the deep sea context. This is because EQD in this context is used to define an extended transport such as a trailer attached to a truck, containers attached to a trailer etc. Containers in the deep sea context ARE NOT part of an extended definition of transport but are considered as integral with the consignment and are thus described at the consignment level.

EQD - M 1 - Equipment details

This segment is used to indicate the units of equipment which will be used to transport the consolidated consignment.

EQN - C 1 - Number of units

This segment is used to specify the number of pieces of equipment required for the transport of the consolidated consignment.

## 4. Segments Description

| | | | |
|---|---|---|---|
| SEL | - C | 9 | - Seal number<br>This segment is used to specify a seal number and to identify the sealing party for the equipment identified in the EQD segment. |
| NAD | - C | 9 | - Name and address<br>This segment is used to identify any parties related to the equipment specified in the EQD segment. |
| **SG25** | - C | 9999 | - **CNI-DTM-CNT-TSR-MOA-FTX-SG31-SG32-SG33-SG38-SG43-SG50-SG70**<br>A segment group to give information about all consignments included in a voyage/ flight or consolidation. |
| CNI | - M | 1 | - Consignment information<br>This segment is used to identify a consignment included in the consolidation by its shipment reference number. In the IFTMnn messages the shipment reference number is provided in data element 1153 of the RFF segment at the message level using the code value 'CU'. |
| DTM | - C | 9 | - Date/time/period<br>This segment is used to specify any dates related to the consignment identified in the CNI segment. |
| CNT | - C | 9 | - Control total<br>This segment is used to provide consignment control information such as, the total number of packages in the consignment. |
| TSR | - C | 9 | - Transport service requirements<br>This segment is used to indicate any special contracts, services or priorities related to the current consignment. |
| MOA | - C | 99 | - Monetary amount<br>This segment is used to specify monetary values related to the current consignment. |
| FTX | - C | 99 | - Free text<br>This segment is used to provide free form or coded text information related to consignment. |
| **SG31** | - C | 2 | - **TOD-LOC**<br>A group of segments to specify terms of delivery and related locations. |
| TOD | - M | 1 | - Terms of delivery or transport<br>This segment is used to specify the terms of delivery for the current consignment. |
| LOC | - C | 9 | - Place/location identification<br>This segment is used to indicate the location to which the terms of delivery apply. |
| **SG32** | - C | 999 | - **RFF-DTM**<br>A group of segments containing a reference and constants which apply to the entire consignment. |
| RFF | - M | 1 | - Reference<br>This segment is used to specify any references related to the current consignment. |
| DTM | - C | 9 | - Date/time/period<br>This segment is used to specify any dates related to the previous RFF segment. |
| **SG33** | - C | 9 | - **GOR-DTM-LOC-SEL-FTX-SG34**<br>A group of segments to identify customs and other governmental procedures and required documents. |
| GOR | - M | 1 | - Governmental requirements<br>This segment is used to indicate any applicable governmental procedures and required action related to the import, export or transit of the current consignment, e.g. arrangements to be made for the inspection of the goods by customs at the time of export. |

## 4. Segments Description

DTM - C 9 - Date/time/period

This segment is used to specify any dates or periods related to governmental procedures and/or documents for the current consignment, e.g. the expiration date of the related customs documents.

LOC - C 9 - Place/location identification

This segment is used to identify any locations related to the governmental procedures for the current consignment, e.g. the customs office at which the consignment leaves the country.

SEL - C 9 - Seal number

This segment is used to specify a seal number and the sealing party for the current consignment, e.g. the carrier being responsible for sealing the truck(s).

FTX - C 9 - Free text

This segment is used to specify additional information for the current consignment.

**SG34** - C 9 - **DOC-DTM**

A group of segments to specify required documents by government.

DOC - M 1 - Document/message details

This segment is used to identify any documentation related to the current consignment which is required by government, e.g. despatch note model T2 that ascertains that all goods of the consignment were originally produced in a country of the European Community.

DTM - C 1 - Date/time/period

This segment is used to specify any dates related to the previous DOC segment, e. g. date of the despatch note model T2.

**SG38** - C 99 - **TDT-DTM-SG39-SG40**

A group of segments to indicate details of the movement of goods such as mode and means of transport, locations, departure, and arrival date(s) and time(s).

TDT - M 1 - Details of transport

This segment is used to indicate the transport means, and where necessary, the carrier to be used for the current consignment. When used, it is mandatory to indicate the main carriage transport mode in this segment.

DTM - C 9 - Date/time/period

This segment is used to specify dates relating to the transport means.

**SG39** - C 99 - **LOC-DTM**

A group of segments to specify a location and date/time related to this leg of transport.

LOC - M 1 - Place/location identification

This segment is used to identify locations relating to the transport details for the current consignment.

DTM - C 9 - Date/time/period

This segment is used to specify any dates related to the location identified for a specific stage of transport.

**SG40** - C 9 - **RFF-DTM**

A group of segments to specify an additional reference related to the stage of the transport.

RFF - M 1 - Reference

This segment is used to specify references related to the transport details for the current consignment.

DTM - C 1 - Date/time/period

This segment is used to specify any dates related to the previous RFF segment.

## 4. Segments Description

**SG43** - C 99 - **NAD-LOC-MOA-SG44-SG45-SG47**

A group of segments to identify a party, related references, locations contacts, required documents, and charges to be paid by the party.

NAD - M 1 - Name and address

This segment is used to identify the consignee for the currently identified consignment.

LOC - C 9 - Place/location identification

This segment is used to identify any locations related to the party identified in the NAD segment.

MOA - C 9 - Monetary amount

This segment is used to indicate monetary amounts for the party receiving the goods.

**SG44** - C 9 - **CTA-COM**

A group of segments identifying a contact and its communications related to the party.

CTA - M 1 - Contact information

This segment is used to provide department and contact names within the party identified in the NAD segment.

COM - C 9 - Communication contact

This segment identifies the communications number and type of communications for the person or department identified in the previous CTA segment.

**SG45** - C 9 - **DOC-DTM**

A group of segments to identify required documents.

DOC - M 1 - Document/message details

This segment is used to identify any documentation which is required by the party identified in the NAD segment.

DTM - C 1 - Date/time/period

This segment is used to specify any dates related to the previous DOC segment.

**SG47** - C 9 - **RFF**

A group of segments to specify a reference related to the party.

RFF - M 1 - Reference

This segment is used to identify any references related to the party identified in the NAD segment which are required but do not accompany the consignment, e.g., contract numbers.

**Forwarding and Consolidation Detail Section**

**SG50** - C 999 - **GID-HAN-TMP-RNG-MOA-PIA-FTX-SG51-GDS-SG52-SG53-SG54-SG55-SG56-SG61-SG65**

A group of segments to describe the goods items for which transport is undertaken.

GID - M 1 - Goods item details

This segment is used to specify the number and type of packages which make up a goods item in the current consignment.

HAN - C 1 - Handling instructions

This segment is used to provide a handling instruction relevant to the transport line item identified in the GID segment.

TMP - C 1 - Temperature

This segment is used to specify a temperature setting related to the current goods item.

## 4. Segments Description

RNG - C 1 - Range details

This segment is used to specify a temperature range for the current goods item.

MOA - C 9 - Monetary amount

This segment is used to specify the value of the current goods item for customs, insurance or other valuation purposes.

PIA - C 9 - Additional product id

This segment is used to specify additional product identification codes for the current goods item.

FTX - C 9 - Free text

This segment is used to provide free form or coded text information related to the goods item.

**SG51** - C 9 - **NAD-DTM**

A group of segments to identify different places of collection and/or delivery for the goods item.

NAD - M 1 - Name and address

This segment is used to specify the delivery and despatch parties for the current goods item.

DTM - C 1 - Date/time/period

This segment is used to specify dates and times related to the despatch or delivery parties specified in the previous NAD segment.

GDS - C 9 - Nature of cargo

This segment is used to specify the exact nature of the goods.

**SG52** - C 99 - **MEA-EQN**

A group of segments to specify measurements applicable to a goods item.

MEA - M 1 - Measurements

This segment is used to specify a measurement for the goods identified in the GID segment. All measurements given in the MEA segments relate to the highest level of packaging (the despatch units) identified in the GID segment.

EQN - C 1 - Number of units

This segment is used to specify the number of packages (despatch units) within the goods item to which the measurement applies.

**SG53** - C 99 - **DIM-EQN**

A group of segments to specify dimensions applicable to a goods item.

DIM - M 1 - Dimensions

This segment is used to indicate the dimensions of the goods item identified in the GID segment. All dimensions given in the DIM segments relate to the highest level packaging (the despatch units) identified in the GID segment.

EQN - C 1 - Number of units

This segment is used to specify the number of packages (despatch units) within the goods items to which the dimensions apply.

**SG54** - C 9 - **RFF-DTM**

A group of segments to identify references to a goods item.

RFF - M 1 - Reference

This segment is used to specify references which are applicable to the current goods item only. The references specified will override those provided in group 32 when the same qualifier is used.

DTM - C 9 - Date/time/period

This segment is used to indicate dates relevant to the references specified in the previous RFF segment.

## 4. Segments Description

**SG55** - C 999 - **PCI-GIN**

A group of segments to specify marks and numbers of a goods item.

PCI - M 1 - Package identification

This segment is used to specify what markings and labels are marked on the packaging of the current goods item.

GIN - C 9 - Goods identity number

This segment is used to provide the Serial Shipping Container Code which has been marked on the packaging of the current goods item.

**SG56** - C 9 - **DOC-DTM**

A group of segments to specify documents and associated date(s) and time(s) for a goods item.

DOC - M 1 - Document/message details

This segment is used to specify documents which are required for the current goods item only and which must accompany the goods during transport.

DTM - C 9 - Date/time/period

This segment is used to specify dates relating to the documents identified in the previous DOC segment.

**SG61** - C 999 - **SGP**

A group of segments to specify the distribution of a goods item among the transport equipment.

SGP - M 1 - Split goods placement

This segment is used to specify the placement of the goods item within the equipment used for its transportation.

**SG65** - C 99 - **DGS-FTX-SG66-SG67**

A group of segments to specify dangerous goods details related to the goods item. One goods item may be in different dangerous goods classes.

DGS - M 1 - Dangerous goods

This segment is used to indicate whether the current goods item is considered a dangerous good.

FTX - C 99 - Free text

This segment is used to specify any additional information required for the dangerous goods.

**SG66** - C 9 - **CTA-COM**

A group of segments to identify a contact to whom communication regarding the dangerous goods can be directed.

CTA - M 1 - Contact information

This segment is used to specify a contact name relating to the dangerous goods identified in the DGS segment.

COM - C 9 - Communication contact

This segment identifies the communications number and type of communications for the person or department identified in the previous CTA segment.

**SG67** - C 9 - **MEA-EQN**

A group of segments to identify dangerous goods measurements.

MEA - M 1 - Measurements

This segment is used to indicate a measurement of the current dangerous goods item.

EQN - C 1 - Number of units

This segment is used to indicate the number of units to which the dangerous goods measurements apply.

## 4. Segments Description

**SG70** - C 999 - **EQD-EQN-MEA-DIM-SEL-SG72**

A group of segments to specify equipment in which goods are transported.

EQD - M 1 - Equipment details

This segment is used to indicate the units of equipment which will be used to transport the current consignment.

EQN - C 1 - Number of units

This segment is used to specify the number of pieces of equipment required.

MEA - C 9 - Measurements

This segment is used to specify the physical dimensions of the equipment identified in the preceding EQD segment.

DIM - C 9 - Dimensions

This segment is used to indicate the dimensions of the equipment identified in the EQD segment.

SEL - C 99 - Seal number

This segment is used to specify a seal number, and the party applying the seal, for the equipment identified in the EQD segment.

**SG72** - C 9 - **NAD**

A group of segments to identify different equipment pick-up or drop-off places.

NAD - M 1 - Name and address

This segment is used to specify pick up or drop off parties for the equipment specified in the EQD segment.

**Forwarding And Consolidation Summary Section**

UNT - M 1 - Message trailer

This segment is a mandatory UN/EDIFACT segment. It must always be the last segment in the message.

## 5. Segments Layout

This section describes each segment used in the EANCOM® Forwarding and consolidation summary message. The original EDIFACT segment layout is listed. The appropriate comments relevant to the EANCOM® subset are indicated.

***Notes:***

1. The segments are presented in the sequence in which they appear in the message. The segment or segment group tag is followed by the (M)andatory / (C)onditional indicator, the maximum number of occurrences and the segment description.

2. Reading from left to right, in column one, the data element tags and descriptions are shown, followed by in the second column the EDIFACT status (M or C), the field format, and the picture of the data elements. These first pieces of information constitute the original EDIFACT segment layout.

   Following the EDIFACT information, EANCOM® specific information is provided in the third, fourth, and fifth columns. In the third column a status indicator for the use of (C)onditional EDIFACT data elements (see 2.1 through 2.3 below), in the fourth column the restricted indicator (see point 3 on the following page), and in the fifth column notes and code values used for specific data elements in the message.

2.1 (M)andatory data elements in EDIFACT segments retain their status in EANCOM®.

2.2 Additionally, there are five types of status for data elements with a (C)onditional EDIFACT status, whether for simple, component or composite data elements. These are listed below and can be identified when relevant by the following abbreviations:

| | | |
|---|---|---|
| - REQUIRED | **R** | Indicates that the entity is required and must be sent. |
| - ADVISED | **A** | Indicates that the entity is advised or recommended. |
| - DEPENDENT | **D** | Indicates that the entity must be sent in certain conditions, as defined by the relevant explanatory note. |
| - OPTIONAL | **O** | Indicates that the entity is optional and may be sent at the discretion of the user. |
| - NOT USED | **N** | Indicates that the entity is not used and should be omitted. |

2.3 If a composite is flagged as **N, NOT USED**, all data elements within that composite will have blank status indicators assigned to them.

3. Status indicators detailed in the fourth column which directly relate to the code values detailed in the fifth **column** may have two values:

| | | |
|---|---|---|
| - RESTRICTED | ***** | A data element marked with an asterisk (*) in the fourth column indicates that the listed codes in column five are the only codes available for use with this data element, in this segment, in this message. |
| - OPEN | | All data elements where coded representation of data is possible and a restricted set of code values is not indicated are open (no asterisk in fourth column). The available codes are listed in the EANCOM® Data Elements and Code Sets Directory. Code values may be given as examples or there may be a note on the format or type of code to be used. |

4. Different colours are used for the code values in the segment details: restricted codes are in red and open codes in blue.

## 5. Segments Layout

Segment number: 1

**UNH** - M 1 - Message header

Function:

To head, identify and specify a message.

Notes:
1. Data element S009/0057 is retained for upward compatibility. The use of S016 and/or S017 is encouraged in preference.
2. The combination of the values carried in data elements 0062 and S009 shall be used to identify uniquely the message within its group (if used) or if not used, within its interchange, for the purpose of acknowledgement.

| | | EDIFACT | GS1 | * | Description |
|---|---|---|---|---|---|
| 0062 | Message reference number | M an..14 | **M** | | Senders unique message reference. Sequence number of the messages in the interchange. DE 0062 in the UNT will be identical. Sender generated. |
| S009 | MESSAGE IDENTIFIER | M | **M** | | |
| 0065 | Message type | M an..6 | **M** | * | IFCSUM = Forwarding and consolidation summary message |
| 0052 | Message version number | M an..3 | **M** | * | D = Draft version/UN/EDIFACT Directory |
| 0054 | Message release number | M an..3 | **M** | * | 01B = Release 2001 - B |
| 0051 | Controlling agency, coded | M an..3 | **M** | * | UN = UN/CEFACT |
| 0057 | Association assigned code | C an..6 | **R** | * | EAN004 = GS1 version control number (GS1 Permanent Code)<br>Indicates that the message is the EANCOM version 004 of the UNSM Forwarding and Consolidation Summary. |
| 0110 | Code list directory version number | C an..6 | **O** | | This data element can be used to identify the codelist agreed by the interchange partners, e.g. EAN001 = EANCOM 2002 S4 codelist released on 01.12.2002 by GS1. |
| 0113 | Message type sub-function identification | C an..6 | **N** | | |
| 0068 | Common access reference | C an..35 | **N** | | |
| S010 | STATUS OF THE TRANSFER | C | **N** | | |
| 0070 | Sequence of transfers | M n..2 | | | |
| 0073 | First and last transfer | C a1 | | | |
| S016 | MESSAGE SUBSET IDENTIFICATION | C | **N** | | |
| 0115 | Message subset identification | M an..14 | | | |
| 0116 | Message subset version number | C an..3 | | | |
| 0118 | Message subset release number | C an..3 | | | |
| 0051 | Controlling agency, coded | C an..3 | | | |
| S017 | MESSAGE IMPLEMENTATION GUIDELINE IDENTIFICATION | C | **N** | | |
| 0121 | Message implementation guideline identification | M an..14 | | | |

## 5. Segments Layout

| | | | | | |
|---|---|---|---|---|---|
| 0122 | Message implementation guideline version number | C an..3 | | | |

## 5. Segments Layout

Segment number: 1

| | | EDIFACT | GS1 | * | Description |
|---|---|---|---|---|---|
| 0124 | Message implementation guideline release number | C an..3 | | | |
| 0051 | Controlling agency, coded | C an..3 | | | |
| S018 | SCENARIO IDENTIFICATION | C | **N** | | |
| 0127 | Scenario identification | M an..14 | | | |
| 0128 | Scenario version number | C an..3 | | | |
| 0130 | Scenario release number | C an..3 | | | |
| 0051 | Controlling agency, coded | C an..3 | | | |

Segment Notes:

This segment is used to head, identify and specify a message.
DE's 0065, 0052, 0054, and 0051: Indicate that the message is a UNSM Forwarding and Consolidation Summary message based on the D.01B directory under the control of the United Nations.

Example:
UNH+ME000001+IFCSUM:D:01B:UN:EAN004'

## 5. Segments Layout

Segment number: 2

| **BGM** - M 1 - Beginning of message | | | | | |
|---|---|---|---|---|---|
| Function:<br>To indicate the type and function of a message and to transmit the identifying number. | | | | | |
| | | EDIFACT | GS1 | * | Description |
| C002 | DOCUMENT/MESSAGE NAME | C | **R** | | |
| 1001 | Document name code | C an..3 | **R** | * | 335 = Booking request<br>610 = Forwarding instructions<br>630 = Shipping note<br>770 = Booking confirmation<br>781 = Arrival notice (goods)<br>Code value '335' should be used to book transport space for multiple consignments. When using this code it is not necessary to provide all of the goods items details as these will be fully specified in the subsequent multiple transport instruction (code value '610').<br>While the code values '335' and '610' are also used in the IFTMBF and IFTMIN messages respectively the uniqueness of their application in these messages and the IFCSUM message is guaranteed by the combination of the data element 1001 code value and the data element 0065 code value in the UNH segment. |
| 1131 | Code list identification code | C an..17 | **N** | | |
| 3055 | Code list responsible agency code | C an..3 | **N** | | |
| 1000 | Document name | C an..35 | **O** | | |
| C106 | DOCUMENT/MESSAGE IDENTIFICATION | C | **R** | | |
| 1004 | Document identifier | C an..35 | **R** | | Forwarding and consolidation summary number assigned by the document sender.<br>For global unique identification of documents Global Document Type Identifier (GDTI) is available. |
| 1056 | Version identifier | C an..9 | **N** | | |
| 1060 | Revision identifier | C an..6 | **N** | | |

## 5. Segments Layout

| | | | | | |
|---|---|---|---|---|---|
| 1225 | Message function code | C an..3 | **R** | * | 1 = Cancellation<br>5 = Replace<br>7 = Duplicate<br>9 = Original<br>31 = Copy<br>42 = Confirmation via specific means<br>46 = Provisional<br>The message function, coded is a critical data element in this segment. It applies to all data indicated in the message. The following definitions apply for the restricted codes:<br>1 = Cancellation = A cancellation of an entire previously sent forwarding and consolidation summary message. The message being cancelled is identified in the RFF segment in group 01.<br>5 = Replace - Cancel the original forwarding and consolidation summary message and replace with this message The original message which is being |

## 5. Segments Layout

Segment number: 2

| | EDIFACT | GS1 | * | Description |
|---|---|---|---|---|
| | | | | replaced is identified in the RFF segment group 01.<br>7 = Duplicate - Re-transmission on the request of the receiver.<br>9 = Original - Original transmission of the forwarding and consolidation summary message.<br>31 = Copy - Copy of the forwarding and consolidation summary message for a third party for information purposes.<br>42 = Confirmation via specific means - A confirmation of a previous message sent by means other than EDI, e.g. FAX.<br>46 = Provisional - This code is used to indicate that the content of the Multiple Consingemnt Transport Instruction message is provisional and is subject to final approval. |
| 4343 Response type code | C an..3 | **N** | | |

Segment Notes:

This segment is used to indicate the type and function of a message and to transmit the identifying number.
All references other than the document number DE 1004 are to be put in the RFF segment.

Example:
BGM+610+569952+9'

## 5. Segments Layout

Segment number: 3

| **DTM** - C 9 - Date/time/period | | | | | |
|---|---|---|---|---|---|
| Function:<br>To specify date, and/or time, or period. | | | | | |
| | | EDIFACT | GS1 | * | Description |
| C507 | DATE/TIME/PERIOD | M | **M** | | |
| 2005 | Date or time or period function code qualifier | M an..3 | **M** | * | 10 = Shipment date/time, requested<br>11 = Despatch date and/or time<br>17 = Delivery date/time, estimated<br>63 = Delivery date/time, latest<br>64 = Delivery date/time, earliest<br>137 = Document/message date/time<br>235 = Collection date/time, latest |
| 2380 | Date or time or period value | C an..35 | **R** | | |
| 2379 | Date or time or period format code | C an..3 | **R** | | 102 = CCYYMMDD |

Segment Notes:

This segment is used to specify the dates related to the Forwarding and Consolidation Summary message.
DE 2005: Identification of the 'Document/message date/time' (code value 137) is mandatory in an EANCOM message.

Example:
DTM+137:20020112:102'

## 5. Segments Layout

Segment number: 4

| **FTX** - C 99 - Free text | | | | | |
|---|---|---|---|---|---|
| Function:<br>To provide free form or coded text information. | | | | | |
| | | EDIFACT | GS1 | * | Description |
| 4451 | Text subject code qualifier | M an..3 | **M** | | AAI = General information<br>BLR = Transport document remarks |
| 4453 | Free text function code | C an..3 | **O** | * | 1 = Text for subsequent use |
| C107 | TEXT REFERENCE | C | **D** | | This composite is only used when trading partners have agreed to use mutually defined code values. |
| 4441 | Free text value code | M an..17 | **M** | | |
| 1131 | Code list identification code | C an..17 | **O** | | |
| 3055 | Code list responsible agency code | C an..3 | **D** | | 91 = Assigned by supplier or supplier's agent<br>92 = Assigned by buyer or buyer's agent |
| C108 | TEXT LITERAL | C | **D** | | This composite is only used if coded text can not be used. |
| 4440 | Free text value | M an..512 | **M** | | |
| 4440 | Free text value | C an..512 | **O** | | |
| 4440 | Free text value | C an..512 | **O** | | |
| 4440 | Free text value | C an..512 | **O** | | |
| 4440 | Free text value | C an..512 | **O** | | |
| 3453 | Language name code | C an..3 | **D** | | ISO 639 two alpha code<br>This data element is only used when non coded free text has been provided in data element C108. |
| 4447 | Free text format code | C an..3 | **N** | | |

Segment Notes:

This segment is used to provide free form or coded text information related to the entire message.
Use of this segment in free form is not recommended since it may inhibit automatic processing of the Forwarding and Consolidated Summary. Coded references to standard texts is an available functionality which enables automatic processing and reduces transmission overheads. Standard texts should be mutually defined between trading partners and can be used to cover legal or other requirements.

Example:
FTX+AAI+1+002::91'
(Code "002" is agreed to express = Please ensure complete delivery on requested date.)

## 5. Segments Layout

Segment number: 5

**CNT** - C 9 - Control total

Function:

To provide control total.

| | | EDIFACT | GS1 | * | Description |
|---|---|---|---|---|---|
| C270 | CONTROL | M | **M** | | |
| 6069 | Control total type code qualifier | M an..3 | **M** | | 7 = Total gross weight<br>10 = Total number of consignments<br>11 = Total number of packages<br>15 = Total consignment, cube<br>16 = Total number of equipment<br>When using value '15' in this data element the total specified in data element 6066 is arrived at by adding the values specified in data element 6314 of the MEA segment at goods item level when the GMC (Gross measurement cube) code is used in data element 6313 in the same MEA segment.<br>When using code value '11' the total specified in data element 6066 is arrived at by adding the values specified only in the first occurence of C213, data element 7224, of the GID segment. |
| 6066 | Control total value | M n..18 | **M** | | |
| 6411 | Measurement unit code | C an..3 | **O** | | |

Segment Notes:

This segment is used to provide message control information such as the total number of consignments in the consolidation, the total gross weight of the consolidated consignments.

Example:
CNT+11:566'

## 5. Segments Layout

Segment number: 6

| | | | |
|---|---|---|---|
| **SG1** | - C | 9 - | RFF-DTM |
| **RFF** | - M | 1 - | Reference |

Function:

To specify a reference.

| | | EDIFACT | GS1 | * | Description |
|---|---|---|---|---|---|
| C506 | REFERENCE | M | **M** | | |
| 1153 | Reference code qualifier | M an..3 | **M** | * | ACD = Additional reference number<br>ADE = Account number<br>AUB = Party reference<br>CT = Contract number<br>CU = Consignor's reference number<br>PFB = Firm booking reference number (GS1 Temporary Code)<br>PK = Packing list number<br>SRN = Shipment reference number<br>TIN = Transport instruction number<br>Code values 'PFB' and 'TRI' should only be used in conjunction with the codes 1 or 5 in data element 1225 in the BGM segment.<br>Code value 'ADE' should only be used in conjunction with the code 'CZ' in data element 3035 in the NAD segment of segment group 9.<br>Code value 'CU' is used to provide references generated by the consignor which are relevant for the complete consolidation. |
| 1154 | Reference identifier | C an..70 | **R** | | |
| 1156 | Document line identifier | C an..6 | **N** | | |
| 4000 | Reference version identifier | C an..35 | **N** | | |
| 1060 | Revision identifier | C an..6 | **N** | | |

Segment Notes:

This segment is used to specify references which are related to the complete message.

Example:
RFF+TRI:6214'

## 5. Segments Layout

Segment number: 7

| | | | |
|---|---|---|---|
| **SG1** | - C | 9 - | RFF-DTM |
| **DTM** | - C | 9 - | Date/time/period |

Function:

To specify date, and/or time, or period.

| | | EDIFACT | GS1 | * | Description |
|---|---|---|---|---|---|
| C507 | DATE/TIME/PERIOD | M | **M** | | |
| 2005 | Date or time or period function code qualifier | M an..3 | **M** | * | 171 = Reference date/time |
| 2380 | Date or time or period value | C an..35 | **R** | | |
| 2379 | Date or time or period format code | C an..3 | **R** | | 102 = CCYYMMDD |

Segment Notes:

This segment is used to specify the date of the reference specified in the previous RFF segment.

Example:
DTM+171:20020105:102'

## 5. Segments Layout

Segment number: 8

| | | | |
|---|---|---|---|
| **SG4** | - C | 9 - | NAD |
| **NAD** | - M | 1 - | Name and address |

Function:

To specify the name/address and their related function, either by C082 only and/or unstructured by C058 or structured by C080 thru 3207.

| | | EDIFACT | GS1 | * | Description |
|---|---|---|---|---|---|
| 3035 | Party function code qualifier | M an..3 | **M** | * | BY = Buyer<br>CA = Carrier<br>DP = Delivery party<br>LSP = Logistic Service Provider (GS1 Temporary Code)<br>OB = Ordered by<br>SU = Supplier<br>WH = Warehouse keeper |
| C082 | PARTY IDENTIFICATION DETAILS | C | **A** | | |
| 3039 | Party identifier | M an..35 | **M** | | For identification of parties it is recommended to use GLN - Format n13. |
| 1131 | Code list identification code | C an..17 | **N** | | |
| 3055 | Code list responsible agency code | C an..3 | **R** | * | 9 = GS1 |
| C058 | NAME AND ADDRESS | C | **O** | | This composite may only be used to fulfill the requirements of directive 2003/58/EC, article 4. |
| 3124 | Name and address description | M an..35 | **M** | | |
| 3124 | Name and address description | C an..35 | **O** | | |
| 3124 | Name and address description | C an..35 | **O** | | |
| 3124 | Name and address description | C an..35 | **O** | | |
| 3124 | Name and address description | C an..35 | **O** | | |
| C080 | PARTY NAME | C | **D** | | |
| 3036 | Party name | M an..35 | **M** | | Party Name in clear text. |
| 3036 | Party name | C an..35 | **O** | | |
| 3036 | Party name | C an..35 | **O** | | |
| 3036 | Party name | C an..35 | **O** | | |
| 3036 | Party name | C an..35 | **O** | | |
| 3045 | Party name format code | C an..3 | **O** | | |
| C059 | STREET | C | **D** | | |
| 3042 | Street and number or post office box identifier | M an..35 | **M** | | Building Name/Number and Street Name |
| 3042 | Street and number or post office box identifier | C an..35 | **O** | | |
| 3042 | Street and number or post office box identifier | C an..35 | **O** | | |
| 3042 | Street and number or post office box identifier | C an..35 | **O** | | |
| 3164 | City name | C an..35 | **D** | | City/Town name, clear text |
| C819 | COUNTRY SUB-ENTITY | C | **D** | | |

## 5. Segments Layout

Segment number: 8

| | | EDIFACT | GS1 | * | Description |
|---|---|---|---|---|---|
| | DETAILS | | | | |
| 3229 | Country sub-entity name code | C an..9 | **O** | | |
| 1131 | Code list identification code | C an..17 | **O** | | |
| 3055 | Code list responsible agency code | C an..3 | **O** | | |
| 3228 | Country sub-entity name | C an..70 | **O** | | County/State, clear text. |
| 3251 | Postal identification code | C an..17 | **D** | | Postal Code |
| 3207 | Country name code | C an..3 | **D** | | ISO 3166 two alpha code |

Segment Notes:

This NAD segment can be used to identify parties independently of the details of transport in SG9.
Dependency Notes:
The following composites and data elements are only used when a coded name and address can not be used.
The affected composites and data elements are as follows:
C080 - C059 - 3164 - C819 - 3251 - 3207

Example:
NAD+LSP+5411234512309::9'

## 5. Segments Layout

Segment number: 9

| | | | |
|---|---|---|---|
| **SG7** | - C | 9 - | TCC-CUX |
| **TCC** | - M | 1 - | Charge/rate calculations |

Function:

To specify charges.

| | | EDIFACT | GS1 | * | Description |
|---|---|---|---|---|---|
| C200 | CHARGE | C | **R** | | |
| 8023 | Freight and other charges description identifier | C an..17 | **R** | | Freight and other charges description identifier UN/ ECE Recommendation 23 code list, e.g. 101021 |
| 1131 | Code list identification code | C an..17 | **O** | | |
| 3055 | Code list responsible agency code | C an..3 | **D** | | 6 = UN/ECE (United Nations - Economic Commission for Europe)<br>9 = GS1 |
| 8022 | Freight and other charges description | C an..26 | **O** | | |
| 4237 | Payment arrangement code | C an..3 | **O** | | |
| 7140 | Item identifier | C an..35 | **O** | | |
| C203 | RATE/TARIFF CLASS | C | **O** | | |
| 5243 | Rate or tariff class description code | M an..9 | **M** | | |
| 1131 | Code list identification code | C an..17 | **O** | | |
| 3055 | Code list responsible agency code | C an..3 | **O** | | |
| 5242 | Rate or tariff class description | C an..35 | **O** | | |
| 5275 | Supplementary rate or tariff code | C an..6 | **O** | | |
| 1131 | Code list identification code | C an..17 | **O** | | |
| 3055 | Code list responsible agency code | C an..3 | **O** | | |
| 5275 | Supplementary rate or tariff code | C an..6 | **O** | | |
| 1131 | Code list identification code | C an..17 | **O** | | |
| 3055 | Code list responsible agency code | C an..3 | **O** | | |
| C528 | COMMODITY/RATE DETAIL | C | **N** | | |
| 7357 | Commodity identification code | C an..18 | | | |
| 1131 | Code list identification code | C an..17 | | | |
| 3055 | Code list responsible agency code | C an..3 | | | |
| C554 | RATE/TARIFF CLASS DETAIL | C | **N** | | |
| 5243 | Rate or tariff class description code | C an..9 | | | |
| 1131 | Code list identification code | C an..17 | | | |
| 3055 | Code list responsible agency code | C an..3 | | | |

## 5. Segments Layout

Segment number: 9

Segment Notes:

This segment enables the transmission of the freight rate.

Example:
TCC+101021::6+FR::X6’

## 5. Segments Layout

Segment number: 10

| | | | |
|---|---|---|---|
| **SG7** | - C | 9 - | TCC-CUX |
| **CUX** | - C | 1 - | Currencies |

Function:

To specify currencies used in the transaction and relevant details for the rate of exchange.

| | | EDIFACT | GS1 | * | Description |
|---|---|---|---|---|---|
| C504 | CURRENCY DETAILS | C | **R** | | |
| 6347 | Currency usage code qualifier | M an..3 | **M** | * | 2 = Reference currency |
| 6345 | Currency identification code | C an..3 | **R** | | ISO 4217 three alpha |
| 6343 | Currency type code qualifier | C an..3 | **C** | * | 4 = Invoicing currency<br>10 = Pricing currency |
| 6348 | Currency rate value | C n..4 | **N** | | |
| C504 | CURRENCY DETAILS | C | **D** | | The second occurrence of C504 is only used if a target currency is being specified. |
| 6347 | Currency usage code qualifier | M an..3 | **M** | * | 3 = Target currency |
| 6345 | Currency identification code | C an..3 | **R** | | ISO 4217 three alpha |
| 6343 | Currency type code qualifier | C an..3 | **C** | * | 4 = Invoicing currency<br>10 = Pricing currency |
| 6348 | Currency rate value | C n..4 | **O** | | |
| 5402 | Currency exchange rate | C n..12 | **D** | | The rate of exchange which applies to the currencies. The rate of exchange is only used if a target currency has been identified in the second occurrence of C504. |
| 6341 | Exchange rate currency market identifier | C an..3 | **N** | | |

Segment Notes:

This segment is used to specify currency information for the freight calculation.
The CUX Segment is mandatory for international exchanges.
When specifying Reference and Target Currencies for international trade, one occurrence of CUX is all that is required. The reference currency is identified in the first occurrence of composite C504, with the target currency specified in the second occurrence of C504. The rate of exchange between the two is detailed in DE 5402.
The general rule for calculating the rate of exchange is as follows : Reference Currency multiplied by Rate = Target Currency.

Example:
CUX+2:EUR:10+3:USD:4+0.90243'

## 5. Segments Layout

Segment number: 11

| | | | |
|---|---|---|---|
| **SG9** | - C | 9 - | TDT-TSR-SG10-SG16 |
| **TDT** | - M | 1 - | Details of transport |

Function:

To specify the transport details such as mode of transport, means of transport, its conveyance reference number and the identification of the means of transport.
The segment may be pointed to by the TPL segment.

| | | EDIFACT | GS1 | * | Description |
|---|---|---|---|---|---|
| 8051 | Transport stage code qualifier | M an..3 | **M** | * | 20 = Main-carriage transport |
| 8028 | Means of transport journey identifier | C an..17 | **O** | | Reference number covering the transport. |
| C220 | MODE OF TRANSPORT | C | **A** | | |
| 8067 | Transport mode name code | C an..3 | **R** | | 10 =<br>20 =<br>30 =<br>40 =<br>60 = |
| 8066 | Transport mode name | C an..17 | **N** | | |
| C228 | TRANSPORT MEANS | C | **O** | | DE 8179 and DE 8178 are only used when the type of transport must be specifically identified, that is, a generic description such as road transport is unsuitable. |
| 8179 | Transport means description code | C an..8 | **D** | | 23 = Rail bulk car<br>31 = Truck |
| 8178 | Transport means description | C an..17 | **D** | | |
| C040 | CARRIER | C | **O** | | |
| 3127 | Carrier identifier | C an..17 | **A** | | Global Location Number GLN - Format n13 |
| 1131 | Code list identification code | C an..17 | **O** | | |
| 3055 | Code list responsible agency code | C an..3 | **D** | | 9 = GS1 |
| 3128 | Carrier name | C an..35 | **O** | | |
| 8101 | Transit direction indicator code | C an..3 | **N** | | |
| C401 | EXCESS TRANSPORTATION INFORMATION | C | **N** | | |
| 8457 | Excess transportation reason code | M an..3 | | | |
| 8459 | Excess transportation responsibility code | M an..3 | | | |
| 7130 | Customer shipment authorisation identifier | C an..17 | | | |
| C222 | TRANSPORT IDENTIFICATION | C | **O** | | |
| 8213 | Transport means identification name identifier | C an..9 | **O** | | |
| 1131 | Code list identification code | C an..17 | **O** | | |
| 3055 | Code list responsible agency code | C an..3 | **D** | | DE 3055 must be used if DE 8213 is used. |
| 8212 | Transport means identification | C an..35 | **R** | | Vehicle license plate/Aircraft number. |

## 5. Segments Layout

Segment number: 11

| | | EDIFACT | GS1 | * | Description |
|---|---|---|---|---|---|
| | name | | | | |
| 8453 | Transport means nationality code | C an..3 | **O** | | ISO 3166 two alpha code |
| 8281 | Transport means ownership indicator code | C an..3 | **N** | | |

Segment Notes:

This segment is used to specify transport services required to transport the complete consolidated consignment. The message should be used to provide only one transport stage and therefore this segment group is only repeated once per message.

Example:
TDT+20++30+31'

## 5. Segments Layout

Segment number: 12

| | | | |
|---|---|---|---|
| **SG9** | - C | 9 - | TDT-TSR-SG10-SG16 |
| **TSR** | - C | 9 - | Transport service requirements |

Function:

To specify the contract and carriage conditions and service and priority requirements for the transport.

| | | EDIFACT | GS1 | * | Description |
|---|---|---|---|---|---|
| C536 | CONTRACT AND CARRIAGE CONDITION | C | **O** | | |
| 4065 | Contract and carriage condition code | M an..3 | **M** | | 2 = Special agreement for parcels transport<br>3 = Special agreement for full loading transport<br>5 = FIATA combined transport bill of lading<br>11 = CMR carnet |
| 1131 | Code list identification code | C an..17 | **O** | | |
| 3055 | Code list responsible agency code | C an..3 | **D** | | |
| C233 | SERVICE | C | **O** | | |
| 7273 | Service requirement code | M an..3 | **M** | | 1 = Carrier loads<br>4 = Shipper loads |
| 1131 | Code list identification code | C an..17 | **O** | | |
| 3055 | Code list responsible agency code | C an..3 | **D** | | |
| 7273 | Service requirement code | C an..3 | **O** | | |
| 1131 | Code list identification code | C an..17 | **O** | | |
| 3055 | Code list responsible agency code | C an..3 | **D** | | |
| C537 | TRANSPORT PRIORITY | C | **O** | | |
| 4219 | Transport service priority code | M an..3 | **M** | | 1 = Express<br>2 = High speed<br>3 = Normal speed |
| 1131 | Code list identification code | C an..17 | **O** | | |
| 3055 | Code list responsible agency code | C an..3 | **D** | | |
| C703 | NATURE OF CARGO | C | **N** | | |
| 7085 | Cargo type classification code | M an..3 | | | |
| 1131 | Code list identification code | C an..17 | | | |
| 3055 | Code list responsible agency code | C an..3 | | | |

Segment Notes:

This segment is used to indicate any special contracts, services or priorities in relation to the transport of the consolidated consignment.

Example:
TSR+3+1'

## 5. Segments Layout

Segment number: 13

| | | | |
|---|---|---|---|
| **SG9** | - C | 9 - | TDT-TSR-SG10-SG16 |
| **SG10** | - C | 9 - | LOC-DTM |
| **LOC** | - M | 1 - | Place/location identification |

Function:

To identify a place or a location and/or related locations.

| | | EDIFACT | GS1 | * | Description |
|---|---|---|---|---|---|
| 3227 | Location function code qualifier | M an..3 | **M** | | 9 = Place/port of loading<br>11 = Place/port of discharge<br>13 = Place of transhipment<br>17 = Border crossing place |
| C517 | LOCATION IDENTIFICATION | C | **A** | | |
| 3225 | Location name code | C an..25 | **A** | | GLN - Format n13 |
| 1131 | Code list identification code | C an..17 | **O** | | |
| 3055 | Code list responsible agency code | C an..3 | **D** | | 9 = GS1<br>DE 3055 must be used if DE 3225 is used and does not contain an UN/LOCODE. |
| 3224 | Location name | C an..256 | **O** | | |
| C519 | RELATED LOCATION ONE IDENTIFICATION | C | **N** | | |
| 3223 | First related location name code | C an..25 | | | |
| 1131 | Code list identification code | C an..17 | | | |
| 3055 | Code list responsible agency code | C an..3 | | | |
| 3222 | First related location name | C an..70 | | | |
| C553 | RELATED LOCATION TWO IDENTIFICATION | C | **N** | | |
| 3233 | Second related location name code | C an..25 | | | |
| 1131 | Code list identification code | C an..17 | | | |
| 3055 | Code list responsible agency code | C an..3 | | | |
| 3232 | Second related location name | C an..70 | | | |
| 5479 | Relation code | C an..3 | **N** | | |

Segment Notes:

This segment is used to identify locations related to the transport details for the consolidated consignment.

Example:
LOC+9+5412345678908::9'

## 5. Segments Layout

Segment number: 14

| | | | |
|---|---|---|---|
| **SG9** | - C | 9 - | TDT-TSR-SG10-SG16 |
| **SG10** | - C | 9 - | LOC-DTM |
| **DTM** | - C | 9 - | Date/time/period |

Function:

To specify date, and/or time, or period.

| | | EDIFACT | GS1 | * | Description |
|---|---|---|---|---|---|
| C507 | DATE/TIME/PERIOD | M | **M** | | |
| 2005 | Date or time or period function code qualifier | M an..3 | **M** | * | 63 = Delivery date/time, latest<br>64 = Delivery date/time, earliest<br>132 = Arrival date/time, estimated<br>232 = Arrival date/time, scheduled<br>186 = Departure date/time, actual<br>189 = Departure date/time, scheduled<br>231 = Arrival date/time, earliest<br>255 = Availability due date<br>362 = End availability date |
| 2380 | Date or time or period value | C an..35 | **R** | | |
| 2379 | Date or time or period format code | C an..3 | **R** | | 102 = CCYYMMDD<br>203 = CCYYMMDDHHMM |

Segment Notes:

This segment is used to specify dates relating to the transport details for the consolidated consignment.

Example:
DTM+189:200201151000:203'

## 5. Segments Layout

Segment number: 15

| | | | |
|---|---|---|---|
| **SG9** | - C | 9 - | TDT-TSR-SG10-SG16 |
| **SG16** | - C | 9 - | NAD-LOC-SG17-SG18 |
| **NAD** | - M | 1 - | Name and address |

Function:

To specify the name/address and their related function, either by C082 only and/or unstructured by C058 or structured by C080 thru 3207.

| | | EDIFACT | GS1 | * | Description |
|---|---|---|---|---|---|
| 3035 | Party function code qualifier | M an..3 | **M** | * | CA = Carrier<br>CZ = Consignor<br>DEQ = Shipper<br>FW = Freight forwarder<br>PW = Despatch party<br>SF = Ship from |
| C082 | PARTY IDENTIFICATION DETAILS | C | **A** | | |
| 3039 | Party identifier | M an..35 | **M** | | For identification of parties it is recommended to use GLN - Format n13. |
| 1131 | Code list identification code | C an..17 | **N** | | |
| 3055 | Code list responsible agency code | C an..3 | **R** | * | 9 = GS1 |
| C058 | NAME AND ADDRESS | C | **O** | | This composite may only be used to fulfill the requirements of directive 2003/58/EC, article 4. |
| 3124 | Name and address description | M an..35 | **M** | | |
| 3124 | Name and address description | C an..35 | **O** | | |
| 3124 | Name and address description | C an..35 | **O** | | |
| 3124 | Name and address description | C an..35 | **O** | | |
| 3124 | Name and address description | C an..35 | **O** | | |
| C080 | PARTY NAME | C | **D** | | |
| 3036 | Party name | M an..35 | **M** | | Party Name in clear text. |
| 3036 | Party name | C an..35 | **O** | | |
| 3036 | Party name | C an..35 | **O** | | |
| 3036 | Party name | C an..35 | **O** | | |
| 3036 | Party name | C an..35 | **O** | | |
| 3045 | Party name format code | C an..3 | **O** | | |
| C059 | STREET | C | **D** | | |
| 3042 | Street and number or post office box identifier | M an..35 | **M** | | Building Name/Number and Street |
| 3042 | Street and number or post office box identifier | C an..35 | **O** | | Name and/or P.O. Box |
| 3042 | Street and number or post office box identifier | C an..35 | **O** | | |
| 3042 | Street and number or post office box identifier | C an..35 | **O** | | |
| 3164 | City name | C an..35 | **D** | | City/Town, clear text. |
| C819 | COUNTRY SUB-ENTITY DETAILS | C | **D** | | |

## 5. Segments Layout

Segment number: 15

| | | EDIFACT | GS1 | * | Description |
|---|---|---|---|---|---|
| 3229 | Country sub-entity name code | C an..9 | **O** | | |
| 1131 | Code list identification code | C an..17 | **O** | | |
| 3055 | Code list responsible agency code | C an..3 | **O** | | |
| 3228 | Country sub-entity name | C an..70 | **O** | | County/State, clear text. |
| 3251 | Postal identification code | C an..17 | **D** | | Postal Code |
| 3207 | Country name code | C an..3 | **D** | | ISO 3166 two alpha code |

Segment Notes:

This segment is used to identify the parties involved in the Forwarding and Consolidation Summary message. Identification of the Consignor and Carrier or Freight Forwarder is mandatory in the Forwarding and Consolidation Summary message.

Example:
NAD+CZ+5411234512309::9'
NAD+CA+5412345123458::9'

Dependency Notes:
The following composites and data elements are only used when a coded name and address can not be used.
The affected composites and data elements are as follows:
C080 - C059 - 3164 - C819 - 3251 - 3207

## 5. Segments Layout

Segment number: 16

| | | | |
|---|---|---|---|
| **SG9** | - C | 9 - | TDT-TSR-SG10-SG16 |
| **SG16** | - C | 9 - | NAD-LOC-SG17-SG18 |
| **LOC** | - C | 9 - | Place/location identification |

Function:

To identify a place or a location and/or related locations.

| | | EDIFACT | GS1 | * | Description |
|---|---|---|---|---|---|
| 3227 | Location function code qualifier | M an..3 | **M** | | 5 = Place of departure<br>13 = Place of transhipment |
| C517 | LOCATION IDENTIFICATION | C | **A** | | |
| 3225 | Location name code | C an..25 | **A** | | GLN - Format n13 |
| 1131 | Code list identification code | C an..17 | **O** | | |
| 3055 | Code list responsible agency code | C an..3 | **D** | | 9 = GS1<br>DE 3055 must be used if DE 3225 is used and does not contain an UN/LOCODE. |
| 3224 | Location name | C an..256 | **O** | | |
| C519 | RELATED LOCATION ONE IDENTIFICATION | C | **N** | | |
| 3223 | First related location name code | C an..25 | | | |
| 1131 | Code list identification code | C an..17 | | | |
| 3055 | Code list responsible agency code | C an..3 | | | |
| 3222 | First related location name | C an..70 | | | |
| C553 | RELATED LOCATION TWO IDENTIFICATION | C | **N** | | |
| 3233 | Second related location name code | C an..25 | | | |
| 1131 | Code list identification code | C an..17 | | | |
| 3055 | Code list responsible agency code | C an..3 | | | |
| 3232 | Second related location name | C an..70 | | | |
| 5479 | Relation code | C an..3 | **N** | | |

Segment Notes:

This segment is used to identify locations related to the party identified in the NAD segment.

Example:
LOC+5+5412345678908::9'

## 5. Segments Layout

Segment number: 17

| | | | |
|---|---|---|---|
| **SG9** | - C | 9 - | TDT-TSR-SG10-SG16 |
| **SG16** | - C | 9 - | NAD-LOC-SG17-SG18 |
| **SG17** | - C | 9 - | CTA-COM |
| **CTA** | - M | 1 - | Contact information |

Function:

To identify a person or a department to whom communication should be directed.

| | | EDIFACT | GS1 | * | Description |
|---|---|---|---|---|---|
| 3139 | Contact function code | C an..3 | **R** | | IC = Information contact |
| C056 | DEPARTMENT OR EMPLOYEE DETAILS | C | **O** | | |
| 3413 | Department or employee name code | C an..17 | **O** | | |
| 3412 | Department or employee name | C an..35 | **O** | | |

Segment Notes:

This segment is used to identify department and contact names within the party specified in the NAD segment.

Example:
CTA+IC+:G REID'

## 5. Segments Layout

Segment number: 18

| | | | |
|---|---|---|---|
| **SG9** | - C | 9 - | TDT-TSR-SG10-SG16 |
| **SG16** | - C | 9 - | NAD-LOC-SG17-SG18 |
| **SG17** | - C | 9 - | CTA-COM |
| **COM** | - C | 9 - | Communication contact |

Function:

To identify a communication number of a department or a person to whom communication should be directed.

| | | EDIFACT | GS1 | * | Description |
|---|---|---|---|---|---|
| C076 | COMMUNICATION CONTACT | M | **M** | | |
| 3148 | Communication address identifier | M an..512 | **M** | | |
| 3155 | Communication address code qualifier | M an..3 | **M** | | EM = Electronic mail<br>TE = Telephone<br>AO = Uniform Resource Location (URL) |

Segment Notes:

This segment identifies the communications number and type of communications for the person or department identified in the previous CTA segment.

Example:
COM+0033148759632:FX'

## 5. Segments Layout

Segment number: 19

| | | | |
|---|---|---|---|
| **SG9** | - C | 9 - | TDT-TSR-SG10-SG16 |
| **SG16** | - C | 9 - | NAD-LOC-SG17-SG18 |
| **SG18** | - C | 9 - | DOC-DTM |
| **DOC** | - M | 1 - | Document/message details |

Function:

To identify documents and details directly related to it.

| | | EDIFACT | GS1 | * | Description |
|---|---|---|---|---|---|
| C002 | DOCUMENT/MESSAGE NAME | M | **M** | | |
| 1001 | Document name code | C an..3 | **R** | | 811 = Export licence<br>911 = Import licence |
| 1131 | Code list identification code | C an..17 | **O** | | |
| 3055 | Code list responsible agency code | C an..3 | **D** | | |
| 1000 | Document name | C an..35 | **N** | | |
| C503 | DOCUMENT/MESSAGE DETAILS | C | **O** | | |
| 1004 | Document identifier | C an..35 | **R** | | |
| 1373 | Document status code | C an..3 | **O** | | 9 = To be printed<br>2 = Accompanying goods<br>17 = Document with the goods |
| 1366 | Document source description | C an..70 | **O** | | |
| 3453 | Language name code | C an..3 | **O** | | ISO 639 two alpha |
| 1056 | Version identifier | C an..9 | **N** | | |
| 1060 | Revision identifier | C an..6 | **N** | | |
| 3153 | Communication medium type code | C an..3 | **N** | | |
| 1220 | Document copies required quantity | C n..2 | **O** | | |
| 1218 | Document originals required quantity | C n..2 | **O** | | |

Segment Notes:

This segment is used to identify any documentation which must accompany the consolidated consignment.

Example:
DOC+811+1253D'

## 5. Segments Layout

Segment number: 20

| | | | |
|---|---|---|---|
| **SG9** | - C | 9 - | TDT-TSR-SG10-SG16 |
| **SG16** | - C | 9 - | NAD-LOC-SG17-SG18 |
| **SG18** | - C | 9 - | DOC-DTM |
| **DTM** | - C | 1 - | Date/time/period |

Function:

To specify date, and/or time, or period.

| | | EDIFACT | GS1 | * | Description |
|---|---|---|---|---|---|
| C507 | DATE/TIME/PERIOD | M | **M** | | |
| 2005 | Date or time or period function code qualifier | M an..3 | **M** | * | 7 = Effective date/time<br>36 = Expiry date<br>137 = Document/message date/time<br>273 = Validity period |
| 2380 | Date or time or period value | C an..35 | **R** | | |
| 2379 | Date or time or period format code | C an..3 | **R** | | 102 = CCYYMMDD<br>203 = CCYYMMDDHHMM<br>718 = CCYYMMDD-CCYYMMDD |

Segment Notes:

This segment is used to specify any dates related to the previous DOC segment.

Example:
DTM+137:20020115:102'

## 5. Segments Layout

Segment number: 21

| | | | |
|---|---|---|---|
| **SG21** | - C | 999 | - EQD-EQN-SEL-NAD |
| **EQD** | - M | 1 | - Equipment details |

Function:

To identify a unit of equipment.

| | | EDIFACT | GS1 | * | Description |
|---|---|---|---|---|---|
| 8053 | Equipment type code qualifier | M an..3 | **M** | | BPN = Box pallet non exchangeable<br>CN = Container<br>EFP = Exchangeable EUR flat pallet<br>PA = Pallet<br>UL = ULD (Unit load device)<br>BPZ = Roll Pallet 1<br>DPB = Roll Pallet 2 |
| C237 | EQUIPMENT IDENTIFICATION | C | **R** | | |
| 8260 | Equipment identifier | C an..17 | **O** | | The positioning of goods items within equipment in a consignment is controlled through a link with the SGP segment using the DE 8260. DE 8260 in the EQD segment should have the same value as that specified in the SGP segment (DE 8260) in the applicable goods item group to establish the link. |
| 1131 | Code list identification code | C an..17 | **O** | | |
| 3055 | Code list responsible agency code | C an..3 | **D** | | 9 = GS1 |
| 3207 | Country name code | C an..3 | **O** | | |
| C224 | EQUIPMENT SIZE AND TYPE | C | **O** | | |
| 8155 | Equipment size and type description code | C an..10 | **O** | | 6 = Pressurized tank<br>21 = Container IC 20 ft. |
| 1131 | Code list identification code | C an..17 | **O** | | |
| 3055 | Code list responsible agency code | C an..3 | **D** | | |
| 8154 | Equipment size and type description | C an..35 | **O** | | |
| 8077 | Equipment supplier code | C an..3 | **O** | | 1 = Shipper supplied<br>2 = Carrier supplied |
| 8249 | Equipment status code | C an..3 | **O** | | |
| 8169 | Full or empty indicator code | C an..3 | **O** | | 4 = Empty<br>5 = Full |

Segment Notes:

This segment is used to indicate the units of equipment which will be used to transport the consolidated consignment.

Example:
EQD+UL+45223'

## 5. Segments Layout

Segment number: 22

| | | | | |
|---|---|---|---|---|
| **SG21** | - C | 999 | - | EQD-EQN-SEL-NAD |
| **EQN** | - C | 1 | - | Number of units |

Function:

To specify the number of units.

| | | EDIFACT | GS1 | * | Description |
|---|---|---|---|---|---|
| C523 | NUMBER OF UNIT DETAILS | M | **M** | | |
| 6350 | Units quantity | C n..15 | **R** | | |
| 6353 | Unit type code qualifier | C an..3 | **N** | | |

Segment Notes:

This segment is used to specify the number of pieces of equipment required for the transport of the consolidated consignment.

Example:
EQN+1'

## 5. Segments Layout

Segment number: 23

| | | | |
|---|---|---|---|
| **SG21** | - C | 999 | - EQD-EQN-SEL-NAD |
| **SEL** | - C | 9 | - Seal number |

Function:

To specify the seal number or a range of seal numbers.

| | | EDIFACT | GS1 | * | Description |
|---|---|---|---|---|---|
| 9308 | Seal identifier | C an..35 | **R** | | |
| C215 | SEAL ISSUER | C | **R** | | |
| 9303 | Sealing party name code | C an..3 | **R** | | CA = Carrier<br>CU = Customs<br>SH = Shipper |
| 1131 | Code list identification code | C an..17 | **O** | | |
| 3055 | Code list responsible agency code | C an..3 | **D** | | |
| 9302 | Sealing party name | C an..35 | **O** | | |
| 4517 | Seal condition code | C an..3 | **O** | | |
| C208 | IDENTITY NUMBER RANGE | C | **N** | | |
| 7402 | Object identifier | M an..35 | | | |
| 7402 | Object identifier | C an..35 | | | |

Segment Notes:

This segment is used to specify a seal number and to identify the sealing party for the equipment identified in the EQD segment.

Example:
SEL+96753+SH'

Dependency Notes:
The use of the SEL segment in the segment group 21 respectively 70 is recommended. Only if customs seals are involved in particular transport environments such as bonded goods the SEL segment in the segment group 33 should be used.

## 5. Segments Layout

Segment number: 24

| | | | |
|---|---|---|---|
| **SG21** | - C | 999 | - EQD-EQN-SEL-NAD |
| **NAD** | - C | 9 | - Name and address |

Function:

To specify the name/address and their related function, either by C082 only and/or unstructured by C058 or structured by C080 thru 3207.

| | | EDIFACT | GS1 | * | Description |
|---|---|---|---|---|---|
| 3035 | Party function code qualifier | M an..3 | **M** | | CK = Empty equipment despatch party<br>CR = Empty equipment return party<br>CW = Equipment owner |
| C082 | PARTY IDENTIFICATION DETAILS | C | **A** | | |
| 3039 | Party identifier | M an..35 | **M** | | For identification of parties it is recommended to use GLN - Format n13. |
| 1131 | Code list identification code | C an..17 | **N** | | |
| 3055 | Code list responsible agency code | C an..3 | **R** | | 9 = GS1 |
| C058 | NAME AND ADDRESS | C | **O** | | This composite may only be used to fulfill the requirements of directive 2003/58/EC, article 4. |
| 3124 | Name and address description | M an..35 | **M** | | |
| 3124 | Name and address description | C an..35 | **O** | | |
| 3124 | Name and address description | C an..35 | **O** | | |
| 3124 | Name and address description | C an..35 | **O** | | |
| 3124 | Name and address description | C an..35 | **O** | | |
| C080 | PARTY NAME | C | **D** | | |
| 3036 | Party name | M an..35 | **M** | | Party Name in clear text. |
| 3036 | Party name | C an..35 | **O** | | |
| 3036 | Party name | C an..35 | **O** | | |
| 3036 | Party name | C an..35 | **O** | | |
| 3036 | Party name | C an..35 | **O** | | |
| 3045 | Party name format code | C an..3 | **O** | | |
| C059 | STREET | C | **D** | | |
| 3042 | Street and number or post office box identifier | M an..35 | **M** | | Building Name/Number and Street |
| 3042 | Street and number or post office box identifier | C an..35 | **O** | | Name and/or P.O. Box |
| 3042 | Street and number or post office box identifier | C an..35 | **O** | | |
| 3042 | Street and number or post office box identifier | C an..35 | **O** | | |
| 3164 | City name | C an..35 | **D** | | City/Town, clear text. |
| C819 | COUNTRY SUB-ENTITY DETAILS | C | **D** | | |
| 3229 | Country sub-entity name code | C an..9 | **O** | | |
| 1131 | Code list identification code | C an..17 | **O** | | |
| 3055 | Code list responsible agency | C an..3 | **O** | | |

## 5. Segments Layout

Segment number: 24

| | | EDIFACT | GS1 | * | Description |
|---|---|---|---|---|---|
| | code | | | | |
| 3228 | Country sub-entity name | C an..70 | **O** | | County/State, clear text. |
| 3251 | Postal identification code | C an..17 | **D** | | Postal Code |
| 3207 | Country name code | C an..3 | **D** | | ISO 3166 two alpha code |

Segment Notes:

This segment is used to identify any parties related to the equipment specified in the EQD segment.

Example:
NAD+CK+3323456007896::9'

Dependency Notes:
The following composites and data elements are only used when a coded name and address can not be used.
The affected composites and data elements are as follows:
C080 - C059 - 3164 - C819 - 3251 - 3207

## 5. Segments Layout

Segment number: 25

| | | | | |
|---|---|---|---|---|
| **SG25** | - C | 9999 | - | CNI-DTM-CNT-TSR-MOA-FTX-SG31-SG32-SG33-SG38-SG43-SG50-SG70 |
| **CNI** | - M | 1 | - | Consignment information |

Function:

To identify one consignment.

| | | EDIFACT | GS1 | * | Description |
|---|---|---|---|---|---|
| 1490 | Consolidation item number | C n..4 | **R** | | Serial number differentiating each separate consignment included in the consolidation. |
| C503 | DOCUMENT/MESSAGE DETAILS | C | **O** | | |
| 1004 | Document identifier | C an..35 | **R** | | Consignor shipment reference number. |
| 1373 | Document status code | C an..3 | **O** | | |
| 1366 | Document source description | C an..70 | **N** | | |
| 3453 | Language name code | C an..3 | **N** | | |
| 1056 | Version identifier | C an..9 | **N** | | |
| 1060 | Revision identifier | C an..6 | **N** | | |
| 1312 | Consignment load sequence identifier | C n..4 | **O** | | |

Segment Notes:

This segment is used to identify a consignment included in the consolidation by its shipment reference number. In the IFTMnn messages the shipment reference number is provided in data element 1153 of the RFF segment at the message level using the code value 'CU'.

Example:
CNI+12+AVV23441'

## 5. Segments Layout

Segment number: 26

| | | | |
|---|---|---|---|
| **SG25** | - C | 9999 - | CNI-DTM-CNT-TSR-MOA-FTX-SG31-SG32-SG33-SG38-SG43-SG50-SG70 |
| **DTM** | - C | 9 - | Date/time/period |

Function:

To specify date, and/or time, or period.

| | | EDIFACT | GS1 | * | Description |
|---|---|---|---|---|---|
| C507 | DATE/TIME/PERIOD | M | **M** | | |
| 2005 | Date or time or period function code qualifier | M an..3 | **M** | * | 2 = Delivery date/time, requested<br>10 = Shipment date/time, requested<br>11 = Despatch date and/or time<br>17 = Delivery date/time, estimated<br>36 = Expiry date<br>63 = Delivery date/time, latest<br>64 = Delivery date/time, earliest<br>175 = Advise before date/time<br>200 = Pick-up/collection date/time of cargo<br>234 = Collection date/time, earliest<br>235 = Collection date/time, latest |
| 2380 | Date or time or period value | C an..35 | **R** | | |
| 2379 | Date or time or period format code | C an..3 | **R** | | 102 = CCYYMMDD<br>203 = CCYYMMDDHHMM<br>719 = CCYYMMDDHHMM-CCYYMMDDHHMM |

Segment Notes:

This segment is used to specify any dates related to the consignment identified in the CNI segment.

Example:
DTM+2:19960115:102'

## 5. Segments Layout

Segment number: 27

| | | | | |
|---|---|---|---|---|
| **SG25** | - C | 9999 | - | CNI-DTM-CNT-TSR-MOA-FTX-SG31-SG32-SG33-SG38-SG43-SG50-SG70 |
| **CNT** | - C | 9 | - | Control total |

Function:

To provide control total.

| | | EDIFACT | GS1 | * | Description |
|---|---|---|---|---|---|
| C270 | CONTROL | M | **M** | | |
| 6069 | Control total type code qualifier | M an..3 | **M** | | 11 = Total number of packages<br>15 = Total consignment, cube |
| 6066 | Control total value | M n..18 | **M** | | |
| 6411 | Measurement unit code | C an..3 | **O** | | |

Segment Notes:

This segment is used to provide consignment control information such as, the total number of packages in the consignment.

Example:
CNT+11:42'

## 5. Segments Layout

Segment number: 28

| | | | |
|---|---|---|---|
| **SG25** | - C | 9999 - | CNI-DTM-CNT-TSR-MOA-FTX-SG31-SG32-SG33-SG38-SG43-SG50-SG70 |
| **TSR** | - C | 9 - | Transport service requirements |

Function:

To specify the contract and carriage conditions and service and priority requirements for the transport.

| | | EDIFACT | GS1 | * | Description |
|---|---|---|---|---|---|
| C536 | CONTRACT AND CARRIAGE CONDITION | C | **O** | | |
| 4065 | Contract and carriage condition code | M an..3 | **M** | | 2 = Special agreement for parcels transport<br>3 = Special agreement for full loading transport<br>5 = FIATA combined transport bill of lading |
| 1131 | Code list identification code | C an..17 | **O** | | |
| 3055 | Code list responsible agency code | C an..3 | **D** | | |
| C233 | SERVICE | C | **O** | | |
| 7273 | Service requirement code | M an..3 | **M** | | 1 = Carrier loads<br>4 = Shipper loads<br>13 = Carrier unloads<br>15 = Consignee unloads |
| 1131 | Code list identification code | C an..17 | **O** | | |
| 3055 | Code list responsible agency code | C an..3 | **D** | | |
| 7273 | Service requirement code | C an..3 | **O** | | |
| 1131 | Code list identification code | C an..17 | **O** | | |
| 3055 | Code list responsible agency code | C an..3 | **D** | | |
| C537 | TRANSPORT PRIORITY | C | **O** | | |
| 4219 | Transport service priority code | M an..3 | **M** | | 1 = Express<br>2 = High speed<br>3 = Normal speed |
| 1131 | Code list identification code | C an..17 | **O** | | |
| 3055 | Code list responsible agency code | C an..3 | **D** | | |
| C703 | NATURE OF CARGO | C | **N** | | |
| 7085 | Cargo type classification code | M an..3 | | | |
| 1131 | Code list identification code | C an..17 | | | |
| 3055 | Code list responsible agency code | C an..3 | | | |

Segment Notes:

This segment is used to indicate any special contracts, services or priorities related to the current consignment.

Example:
TSR+3+1'

## 5. Segments Layout

Segment number: 29

| | | | |
|---|---|---|---|
| **SG25** | - C | 9999 - | CNI-DTM-CNT-TSR-MOA-FTX-SG31-SG32-SG33-SG38-SG43-SG50-SG70 |
| **MOA** | - C | 99 - | Monetary amount |

Function:

To specify a monetary amount.

| | | EDIFACT | GS1 | * | Description |
|---|---|---|---|---|---|
| C516 | MONETARY AMOUNT | M | **M** | | |
| 5025 | Monetary amount type code qualifier | M an..3 | **M** | | 22 = Cash on delivery amount<br>40 = Customs value<br>44 = Declared value for carriage<br>157 = Insurance value |
| 5004 | Monetary amount | C n..35 | **R** | | |
| 6345 | Currency identification code | C an..3 | **O** | | |
| 6343 | Currency type code qualifier | C an..3 | **N** | | |
| 4405 | Status description code | C an..3 | **N** | | |

Segment Notes:

This segment is used to specify monetary values related to the current consignment.

Example:
MOA+157:62112'

## 5. Segments Layout

Segment number: 30

| | | | |
|---|---|---|---|
| **SG25** | - C | 9999 - | CNI-DTM-CNT-TSR-MOA-FTX-SG31-SG32-SG33-SG38-SG43-SG50-SG70 |
| **FTX** | - C | 99 - | Free text |

Function:

To provide free form or coded text information.

| | | EDIFACT | GS1 | * | Description |
|---|---|---|---|---|---|
| 4451 | Text subject code qualifier | M an..3 | **M** | | AAI = General information<br>BLR = Transport document remarks<br>DEL = Delivery information<br>HAN = Handling instructions |
| 4453 | Free text function code | C an..3 | **O** | | 1 = Text for subsequent use |
| C107 | TEXT REFERENCE | C | **D** | | This composite is only used when trading partners have agreed to use mutually defined code values. |
| 4441 | Free text value code | M an..17 | **M** | | |
| 1131 | Code list identification code | C an..17 | **O** | | |
| 3055 | Code list responsible agency code | C an..3 | **D** | | 91 = Assigned by supplier or supplier's agent<br>92 = Assigned by buyer or buyer's agent |
| C108 | TEXT LITERAL | C | **D** | | This composite is only used if coded text can not be used. |
| 4440 | Free text value | M an..512 | **M** | | |
| 4440 | Free text value | C an..512 | **O** | | |
| 4440 | Free text value | C an..512 | **O** | | |
| 4440 | Free text value | C an..512 | **O** | | |
| 4440 | Free text value | C an..512 | **O** | | |
| 3453 | Language name code | C an..3 | **D** | | ISO 639 two alpha code<br>This data element is only used when non coded free text has been provided in data element C108. |
| 4447 | Free text format code | C an..3 | **N** | | |

Segment Notes:

This segment is used to provide free form or coded text information related to consignment.
Use of this segment in free form is not recommended since it may inhibit automatic processing of the Forwarding and Consolidation Summary. Coded references to standard texts is an available functionality which enables automatic processing and reduces transmission overheads. Standard texts should be mutually defined between trading partners and can be used to cover legal or other requirements.

Example:
FTX+DEL+1+002::91'
(Code "002" is agreed to express = Please ensure complete delivery on requested date.)

## 5. Segments Layout

Segment number: 31

| | | | |
|---|---|---|---|
| **SG25** | - C | 9999 - | CNI-DTM-CNT-TSR-MOA-FTX-SG31-SG32-SG33-SG38-SG43-SG50-SG70 |
| **SG31** | - C | 2 - | TOD-LOC |
| **TOD** | - M | 1 - | Terms of delivery or transport |

Function:

To specify terms of delivery or transport.

| | | EDIFACT | GS1 | * | Description |
|---|---|---|---|---|---|
| 4055 | Delivery or transport terms function code | C an..3 | **R** | | 6 = Delivery condition |
| 4215 | Transport charges payment method code | C an..3 | **O** | | CC = Collect<br>PP = Prepaid (by seller) |
| C100 | TERMS OF DELIVERY OR TRANSPORT | C | **A** | | |
| 4053 | Delivery or transport terms description code | C an..3 | **R** | | INCOTERMS (See EANCOM Codes Set)<br>If INCOTERMS are applicable, then DE 3055 has to contain code value "9" and DE 1131 must be used. |
| 1131 | Code list identification code | C an..17 | **D** | | |
| 3055 | Code list responsible agency code | C an..3 | **D** | | |
| 4052 | Delivery or transport terms description | C an..70 | **O** | | |
| 4052 | Delivery or transport terms description | C an..70 | **O** | | |

Segment Notes:

This segment is used to specify the terms of delivery for the current consignment.

Example:
TOD+6++CFR:2E:9'
TOD+6++CIF:2E:9'

## 5. Segments Layout

Segment number: 32

| | | | |
|---|---|---|---|
| **SG25** | - C | 9999 - | CNI-DTM-CNT-TSR-MOA-FTX-SG31-SG32-SG33-SG38-SG43-SG50-SG70 |
| **SG31** | - C | 2 - | TOD-LOC |
| **LOC** | - C | 9 - | Place/location identification |

Function:

To identify a place or a location and/or related locations.

| | | EDIFACT | GS1 | * | Description |
|---|---|---|---|---|---|
| 3227 | Location function code qualifier | M an..3 | **M** | * | 1 = Place of terms of delivery |
| C517 | LOCATION IDENTIFICATION | C | **A** | | |
| 3225 | Location name code | C an..25 | **A** | | UN/LOCODE |
| 1131 | Code list identification code | C an..17 | **O** | | |
| 3055 | Code list responsible agency code | C an..3 | **D** | | 3 = IATA (International Air Transport Association)<br>9 = GS1<br>DE 3055 must be used if DE 3225 is used and does not contain an UN/LOCODE. |
| 3224 | Location name | C an..256 | **O** | | |
| C519 | RELATED LOCATION ONE IDENTIFICATION | C | **N** | | |
| 3223 | First related location name code | C an..25 | | | |
| 1131 | Code list identification code | C an..17 | | | |
| 3055 | Code list responsible agency code | C an..3 | | | |
| 3222 | First related location name | C an..70 | | | |
| C553 | RELATED LOCATION TWO IDENTIFICATION | C | **N** | | |
| 3233 | Second related location name code | C an..25 | | | |
| 1131 | Code list identification code | C an..17 | | | |
| 3055 | Code list responsible agency code | C an..3 | | | |
| 3232 | Second related location name | C an..70 | | | |
| 5479 | Relation code | C an..3 | **N** | | |

Segment Notes:

This segment is used to indicate the location to which the terms of delivery apply.

Example:
LOC+1+BE-BRU'

## 5. Segments Layout

Segment number: 33

| | | | | |
|---|---|---|---|---|
| **SG25** | - C | 9999 | - | CNI-DTM-CNT-TSR-MOA-FTX-SG31-SG32-SG33-SG38-SG43-SG50-SG70 |
| **SG32** | - C | 999 | - | RFF-DTM |
| **RFF** | - M | 1 | - | Reference |

Function:

To specify a reference.

| | | EDIFACT | GS1 | * | Description |
|---|---|---|---|---|---|
| C506 | REFERENCE | M | **M** | | |
| 1153 | Reference code qualifier | M an..3 | **M** | | CT = Contract number<br>LC = Letter of credit number |
| 1154 | Reference identifier | C an..70 | **R** | | |
| 1156 | Document line identifier | C an..6 | **N** | | |
| 4000 | Reference version identifier | C an..35 | **N** | | |
| 1060 | Revision identifier | C an..6 | **N** | | |

Segment Notes:

This segment is used to specify any references related to the current consignment.

Example:
RFF+CT:76214'

## 5. Segments Layout

Segment number: 34

| | | | | |
|---|---|---|---|---|
| **SG25** | - C | 9999 | - | CNI-DTM-CNT-TSR-MOA-FTX-SG31-SG32-SG33-SG38-SG43-SG50-SG70 |
| **SG32** | - C | 999 | - | RFF-DTM |
| **DTM** | - C | 9 | - | Date/time/period |

Function:

To specify date, and/or time, or period.

| | | EDIFACT | GS1 | * | Description |
|---|---|---|---|---|---|
| C507 | DATE/TIME/PERIOD | M | **M** | | |
| 2005 | Date or time or period function code qualifier | M an..3 | **M** | * | 171 = Reference date/time |
| 2380 | Date or time or period value | C an..35 | **R** | | |
| 2379 | Date or time or period format code | C an..3 | **R** | | 102 = CCYYMMDD<br>203 = CCYYMMDDHHMM |

Segment Notes:

This segment is used to specify any dates related to the previous RFF segment.

Example:
DTM+171:19931125:102'

## 5. Segments Layout

Segment number: 35

| | | | |
|---|---|---|---|
| **SG25** | - C | 9999 - | CNI-DTM-CNT-TSR-MOA-FTX-SG31-SG32-SG33-SG38-SG43-SG50-SG70 |
| **SG33** | - C | 9 - | GOR-DTM-LOC-SEL-FTX-SG34 |
| **GOR** | - M | 1 - | Governmental requirements |

Function:

To indicate the requirement for a specific governmental action and/or procedure or which specific procedure is valid for a specific part of the transport.

| | | EDIFACT | GS1 | * | Description |
|---|---|---|---|---|---|
| 8323 | Transport movement code | C an..3 | **O** | | 1 = Export<br>2 = Import<br>3 = Transit |
| C232 | GOVERNMENT ACTION | C | **R** | | |
| 9415 | Government agency identification code | C an..3 | **R** | | 5 = Customs<br>7 = Health certificate<br>10 = Live animals |
| 9411 | Government involvement code | C an..3 | **O** | | 6 = Required |
| 9417 | Government action code | C an..3 | **N** | | |
| 9353 | Government procedure code | C an..3 | **O** | | 1 = Already customs cleared in the importing country<br>2 = Documents requirements completed<br>5 = Inspection arrangements required |
| C232 | GOVERNMENT ACTION | C | **O** | | |
| 9415 | Government agency identification code | C an..3 | **R** | | |
| 9411 | Government involvement code | C an..3 | **O** | | |
| 9417 | Government action code | C an..3 | **N** | | |
| 9353 | Government procedure code | C an..3 | **O** | | |
| C232 | GOVERNMENT ACTION | C | **O** | | |
| 9415 | Government agency identification code | C an..3 | **R** | | |
| 9411 | Government involvement code | C an..3 | **O** | | |
| 9417 | Government action code | C an..3 | **N** | | |
| 9353 | Government procedure code | C an..3 | **O** | | |
| C232 | GOVERNMENT ACTION | C | **O** | | |
| 9415 | Government agency identification code | C an..3 | **R** | | |
| 9411 | Government involvement code | C an..3 | **O** | | |
| 9417 | Government action code | C an..3 | **N** | | |
| 9353 | Government procedure code | C an..3 | **O** | | |

Segment Notes:

This segment is used to indicate any applicable governmental procedures and required action related to the import, export or transit of the current consignment, e.g. arrangements to be made for the inspection of the goods by customs at the time of export.

Example:
GOR+1+5:6::5'

## 5. Segments Layout

Segment number: 36

| | | | |
|---|---|---|---|
| **SG25** | - C | 9999 - | CNI-DTM-CNT-TSR-MOA-FTX-SG31-SG32-SG33-SG38-SG43-SG50-SG70 |
| **SG33** | - C | 9 - | GOR-DTM-LOC-SEL-FTX-SG34 |
| **DTM** | - C | 9 - | Date/time/period |

Function:

To specify date, and/or time, or period.

| | | EDIFACT | GS1 | * | Description |
|---|---|---|---|---|---|
| C507 | DATE/TIME/PERIOD | M | **M** | | |
| 2005 | Date or time or period function code qualifier | M an..3 | **M** | | 182 = Issue date<br>192 = Expiration date/time of customs document |
| 2380 | Date or time or period value | C an..35 | **R** | | |
| 2379 | Date or time or period format code | C an..3 | **R** | | 102 = CCYYMMDD |

Segment Notes:

This segment is used to specify any dates or periods related to governmental procedures and/or documents for the current consignment, e.g. the expiration date of the related customs documents.

Example:
DTM+192:19990605:102'

## 5. Segments Layout

Segment number: 37

| | | | |
|---|---|---|---|
| **SG25** | - C | 9999 - | CNI-DTM-CNT-TSR-MOA-FTX-SG31-SG32-SG33-SG38-SG43-SG50-SG70 |
| **SG33** | - C | 9 - | GOR-DTM-LOC-SEL-FTX-SG34 |
| **LOC** | - C | 9 - | Place/location identification |

Function:

To identify a place or a location and/or related locations.

| | | EDIFACT | GS1 | * | Description |
|---|---|---|---|---|---|
| 3227 | Location function code qualifier | M an..3 | **M** | | 42 = Customs office of exit<br>45 = Customs office of destination (transit) |
| C517 | LOCATION IDENTIFICATION | C | **A** | | |
| 3225 | Location name code | C an..25 | **A** | | UN/LOCODE |
| 1131 | Code list identification code | C an..17 | **O** | | |
| 3055 | Code list responsible agency code | C an..3 | **D** | | 3 = IATA (International Air Transport Association)<br>9 = GS1<br>DE 3055 must be used if DE 3225 is used and does not contain an UN/LOCODE. |
| 3224 | Location name | C an..256 | **O** | | |
| C519 | RELATED LOCATION ONE IDENTIFICATION | C | **N** | | |
| 3223 | First related location name code | C an..25 | | | |
| 1131 | Code list identification code | C an..17 | | | |
| 3055 | Code list responsible agency code | C an..3 | | | |
| 3222 | First related location name | C an..70 | | | |
| C553 | RELATED LOCATION TWO IDENTIFICATION | C | **N** | | |
| 3233 | Second related location name code | C an..25 | | | |
| 1131 | Code list identification code | C an..17 | | | |
| 3055 | Code list responsible agency code | C an..3 | | | |
| 3232 | Second related location name | C an..70 | | | |
| 5479 | Relation code | C an..3 | **N** | | |

Segment Notes:

This segment is used to identify any locations related to the governmental procedures for the current consignment, e.g. the customs office at which the consignment leaves the country.

Example:
LOC+42+BE-BRU'

## 5. Segments Layout

Segment number: 38

| | | | |
|---|---|---|---|
| **SG25** | - C | 9999 - | CNI-DTM-CNT-TSR-MOA-FTX-SG31-SG32-SG33-SG38-SG43-SG50-SG70 |
| **SG33** | - C | 9 - | GOR-DTM-LOC-SEL-FTX-SG34 |
| **SEL** | - C | 9 - | Seal number |

Function:

To specify the seal number or a range of seal numbers.

| | | EDIFACT | GS1 | * | Description |
|---|---|---|---|---|---|
| 9308 | Seal identifier | C an..35 | **R** | | |
| C215 | SEAL ISSUER | C | **R** | | |
| 9303 | Sealing party name code | C an..3 | **R** | | CA = Carrier<br>CU = Customs<br>SH = Shipper<br>TO = Terminal operator |
| 1131 | Code list identification code | C an..17 | **O** | | |
| 3055 | Code list responsible agency code | C an..3 | **D** | | |
| 9302 | Sealing party name | C an..35 | **O** | | |
| 4517 | Seal condition code | C an..3 | **O** | | |
| C208 | IDENTITY NUMBER RANGE | C | **N** | | |
| 7402 | Object identifier | M an..35 | | | |
| 7402 | Object identifier | C an..35 | | | |

Segment Notes:

This segment is used to specify a seal number and the sealing party for the current consignment, e.g. the carrier being responsible for sealing the truck(s).

Example:
SEL+4282+CA:::EUROLOG'

Dependency Notes:
The use of the SEL segment in the segment group 21 respectively 70 is recommended. Only if customs seals are involved in particular transport environments such as bonded goods the SEL segment in the segment group 33 should be used.

## 5. Segments Layout

Segment number: 39

| | | | |
|---|---|---|---|
| **SG25** | - C | 9999 - | CNI-DTM-CNT-TSR-MOA-FTX-SG31-SG32-SG33-SG38-SG43-SG50-SG70 |
| **SG33** | - C | 9 - | GOR-DTM-LOC-SEL-FTX-SG34 |
| **FTX** | - C | 9 - | Free text |

Function:

To provide free form or coded text information.

| | | EDIFACT | GS1 | * | Description |
|---|---|---|---|---|---|
| 4451 | Text subject code qualifier | M an..3 | **M** | | CIP = Customs clearance instruction import |
| 4453 | Free text function code | C an..3 | **O** | | 1 = Text for subsequent use<br>3 = Text for immediate use |
| C107 | TEXT REFERENCE | C | **D** | | This composite is only used when trading partners have agreed to use mutually defined code values. |
| 4441 | Free text value code | M an..17 | **M** | | |
| 1131 | Code list identification code | C an..17 | **O** | | |
| 3055 | Code list responsible agency code | C an..3 | **D** | | 91 = Assigned by supplier or supplier's agent<br>92 = Assigned by buyer or buyer's agent |
| C108 | TEXT LITERAL | C | **D** | | This composite is only used if coded text can not be used. |
| 4440 | Free text value | M an..512 | **M** | | |
| 4440 | Free text value | C an..512 | **O** | | |
| 4440 | Free text value | C an..512 | **O** | | |
| 4440 | Free text value | C an..512 | **O** | | |
| 4440 | Free text value | C an..512 | **O** | | |
| 3453 | Language name code | C an..3 | **D** | | ISO 639 two alpha code<br>This data element is only used when non coded free text has been provided in data element C108. |
| 4447 | Free text format code | C an..3 | **N** | | |

Segment Notes:

This segment is used to specify additional information for the current consignment.
Use of this segment in free form is not recommended since it may inhibit automatic processing of the Forwarding and Consolidation Summary Message. Coded references to standard texts is an available functionality which enables automatic processing and reduces transmission and processing overheads. Standard texts should be mutually defined among trading partners and can be used to cover legal and other requirements.

Example:
FTX+CIP+1+001::91'

## 5. Segments Layout

Segment number: 40

| | | | |
|---|---|---|---|
| **SG25** | - C | 9999 - | CNI-DTM-CNT-TSR-MOA-FTX-SG31-SG32-SG33-SG38-SG43-SG50-SG70 |
| **SG33** | - C | 9 - | GOR-DTM-LOC-SEL-FTX-SG34 |
| **SG34** | - C | 9 - | DOC-DTM |
| **DOC** | - M | 1 - | Document/message details |

Function:

To identify documents and details directly related to it.

| | | EDIFACT | GS1 | * | Description |
|---|---|---|---|---|---|
| C002 | DOCUMENT/MESSAGE NAME | M | **M** | | |
| 1001 | Document name code | C an..3 | **R** | | 821 = Despatch note model T1<br>822 = Despatch note model T2 |
| 1131 | Code list identification code | C an..17 | **O** | | |
| 3055 | Code list responsible agency code | C an..3 | **D** | | |
| 1000 | Document name | C an..35 | **O** | | |
| C503 | DOCUMENT/MESSAGE DETAILS | C | **O** | | |
| 1004 | Document identifier | C an..35 | **R** | | |
| 1373 | Document status code | C an..3 | **O** | | 2 = Accompanying goods<br>4 = To arrive by separate EDI message<br>9 = To be printed<br>17 = Document with the goods |
| 1366 | Document source description | C an..70 | **O** | | |
| 3453 | Language name code | C an..3 | **O** | | ISO 639 two alpha |
| 1056 | Version identifier | C an..9 | **N** | | |
| 1060 | Revision identifier | C an..6 | **N** | | |
| 3153 | Communication medium type code | C an..3 | **N** | | |
| 1220 | Document copies required quantity | C n..2 | **O** | | |
| 1218 | Document originals required quantity | C n..2 | **O** | | |

Segment Notes:

This segment is used to identify any documentation related to the current consignment which is required by government, e.g. despatch note model T2 that ascertains that all goods of the consignment were originally produced in a country of the European Community.

Example:
DOC+822+12345:2'

## 5. Segments Layout

Segment number: 41

| | | | |
|---|---|---|---|
| **SG25** | - C | 9999 - | CNI-DTM-CNT-TSR-MOA-FTX-SG31-SG32-SG33-SG38-SG43-SG50-SG70 |
| **SG33** | - C | 9 - | GOR-DTM-LOC-SEL-FTX-SG34 |
| **SG34** | - C | 9 - | DOC-DTM |
| **DTM** | - C | 1 - | Date/time/period |

Function:

To specify date, and/or time, or period.

| | | EDIFACT | GS1 | * | Description |
|---|---|---|---|---|---|
| C507 | DATE/TIME/PERIOD | M | **M** | | |
| 2005 | Date or time or period function code qualifier | M an..3 | **M** | * | 7 = Effective date/time<br>36 = Expiry date<br>137 = Document/message date/time<br>273 = Validity period |
| 2380 | Date or time or period value | C an..35 | **R** | | |
| 2379 | Date or time or period format code | C an..3 | **R** | | 102 = CCYYMMDD<br>203 = CCYYMMDDHHMM<br>718 = CCYYMMDD-CCYYMMDD |

Segment Notes:

This segment is used to specify any dates related to the previous DOC segment, e.g. date of the despatch note model T2.

Example:
DTM+137:19990605:102'

## 5. Segments Layout

Segment number: 42

| | | | |
|---|---|---|---|
| **SG25** | - C | 9999 - | CNI-DTM-CNT-TSR-MOA-FTX-SG31-SG32-SG33-SG38-SG43-SG50-SG70 |
| **SG38** | - C | 99 - | TDT-DTM-SG39-SG40 |
| **TDT** | - M | 1 - | Details of transport |

Function:

To specify the transport details such as mode of transport, means of transport, its conveyance reference number and the identification of the means of transport.
The segment may be pointed to by the TPL segment.

| | | EDIFACT | GS1 | * | Description |
|---|---|---|---|---|---|
| 8051 | Transport stage code qualifier | M an..3 | **M** | | 10 = Pre-carriage transport<br>20 = Main-carriage transport<br>30 = On-carriage transport |
| 8028 | Means of transport journey identifier | C an..17 | **O** | | Reference number covering the transport. |
| C220 | MODE OF TRANSPORT | C | **A** | | |
| 8067 | Transport mode name code | C an..3 | **R** | | 10 =<br>20 =<br>30 =<br>40 =<br>60 = |
| 8066 | Transport mode name | C an..17 | **N** | | |
| C228 | TRANSPORT MEANS | C | **O** | | DE 8179 and DE 8178 are only used when the type of transport must be specifically identified, that is, a generic description such as road transport is unsuitable. |
| 8179 | Transport means description code | C an..8 | **D** | | 23 = Rail bulk car<br>31 = Truck |
| 8178 | Transport means description | C an..17 | **D** | | |
| C040 | CARRIER | C | **O** | | |
| 3127 | Carrier identifier | C an..17 | **A** | | Global Location Number GLN - Format n13 |
| 1131 | Code list identification code | C an..17 | **O** | | |
| 3055 | Code list responsible agency code | C an..3 | **D** | | 9 = GS1 |
| 3128 | Carrier name | C an..35 | **O** | | |
| 8101 | Transit direction indicator code | C an..3 | **O** | | BS = Buyer to supplier<br>SB = Supplier to buyer |
| C401 | EXCESS TRANSPORTATION INFORMATION | C | **N** | | |
| 8457 | Excess transportation reason code | M an..3 | | | |
| 8459 | Excess transportation responsibility code | M an..3 | | | |
| 7130 | Customer shipment authorisation identifier | C an..17 | | | |
| C222 | TRANSPORT IDENTIFICATION | C | **O** | | |
| 8213 | Transport means identification name identifier | C an..9 | **O** | | DE 3055 must be used if DE 8213 is used. |
| 1131 | Code list identification code | C an..17 | **O** | | |

## 5. Segments Layout

Segment number: 42

| | | EDIFACT | GS1 | * | Description |
|---|---|---|---|---|---|
| 3055 | Code list responsible agency code | C an..3 | **D** | | |
| 8212 | Transport means identification name | C an..35 | **R** | | Vehicle licence plate/Aircraft number |
| 8453 | Transport means nationality code | C an..3 | **O** | | ISO 3166 two alpha code |
| 8281 | Transport means ownership indicator code | C an..3 | **N** | | |

Segment Notes:

This segment is used to indicate the transport means, and where necessary, the carrier to be used for the current consignment. When used, it is mandatory to indicate the main carriage transport mode in this segment.

Example:
TDT+20++30+31'

## 5. Segments Layout

Segment number: 43

| | | | |
|---|---|---|---|
| **SG25** | - C | 9999 - | CNI-DTM-CNT-TSR-MOA-FTX-SG31-SG32-SG33-SG38-SG43-SG50-SG70 |
| **SG38** | - C | 99 - | TDT-DTM-SG39-SG40 |
| **DTM** | - C | 9 - | Date/time/period |

Function:

To specify date, and/or time, or period.

| | | EDIFACT | GS1 | * | Description |
|---|---|---|---|---|---|
| C507 | DATE/TIME/PERIOD | M | **M** | | |
| 2005 | Date or time or period function code qualifier | M an..3 | **M** | | 133 = Departure date/time, estimated<br>190 = Transhipment date/time |
| 2380 | Date or time or period value | C an..35 | **R** | | |
| 2379 | Date or time or period format code | C an..3 | **R** | | 102 = CCYYMMDD<br>203 = CCYYMMDDHHMM |

Segment Notes:

This segment is used to specify dates relating to the transport means.

Example:
DTM+133:200212151000:203'

## 5. Segments Layout

Segment number: 44

| | | | |
|---|---|---|---|
| **SG25** | - C | 9999 - | CNI-DTM-CNT-TSR-MOA-FTX-SG31-SG32-SG33-SG38-SG43-SG50-SG70 |
| **SG38** | - C | 99 - | TDT-DTM-SG39-SG40 |
| **SG39** | - C | 99 - | LOC-DTM |
| **LOC** | - M | 1 - | Place/location identification |

Function:

To identify a place or a location and/or related locations.

| | | EDIFACT | GS1 | * | Description |
|---|---|---|---|---|---|
| 3227 | Location function code qualifier | M an..3 | **M** | | 9 = Place/port of loading<br>11 = Place/port of discharge |
| C517 | LOCATION IDENTIFICATION | C | **A** | | |
| 3225 | Location name code | C an..25 | **A** | | GLN - Format n13 |
| 1131 | Code list identification code | C an..17 | **O** | | |
| 3055 | Code list responsible agency code | C an..3 | **D** | | 9 = GS1<br>DE 3055 must be used if DE 3225 is used and does not contain an UN/LOCODE. |
| 3224 | Location name | C an..256 | **O** | | |
| C519 | RELATED LOCATION ONE IDENTIFICATION | C | **N** | | |
| 3223 | First related location name code | C an..25 | | | |
| 1131 | Code list identification code | C an..17 | | | |
| 3055 | Code list responsible agency code | C an..3 | | | |
| 3222 | First related location name | C an..70 | | | |
| C553 | RELATED LOCATION TWO IDENTIFICATION | C | **N** | | |
| 3233 | Second related location name code | C an..25 | | | |
| 1131 | Code list identification code | C an..17 | | | |
| 3055 | Code list responsible agency code | C an..3 | | | |
| 3232 | Second related location name | C an..70 | | | |
| 5479 | Relation code | C an..3 | **N** | | |

Segment Notes:

This segment is used to identify locations relating to the transport details for the current consignment.

Example:
LOC+9+5412345678908::9'

## 5. Segments Layout

Segment number: 45

| | | | | |
|---|---|---|---|---|
| **SG25** | - C | 9999 | - | CNI-DTM-CNT-TSR-MOA-FTX-SG31-SG32-SG33-SG38-SG43-SG50-SG70 |
| **SG38** | - C | 99 | - | TDT-DTM-SG39-SG40 |
| **SG39** | - C | 99 | - | LOC-DTM |
| **DTM** | - C | 9 | - | Date/time/period |

Function:

To specify date, and/or time, or period.

| | | EDIFACT | GS1 | * | Description |
|---|---|---|---|---|---|
| C507 | DATE/TIME/PERIOD | M | **M** | | |
| 2005 | Date or time or period function code qualifier | M an..3 | **M** | | 133 = Departure date/time, estimated<br>136 = Departure date/time |
| 2380 | Date or time or period value | C an..35 | **R** | | |
| 2379 | Date or time or period format code | C an..3 | **R** | | 102 = CCYYMMDD<br>203 = CCYYMMDDHHMM |

Segment Notes:

This segment is used to specify any dates related to the location identified for a specific stage of transport.

Example:
DTM+133:20021210:102'

## 5. Segments Layout

Segment number: 46

| | | | | |
|---|---|---|---|---|
| **SG25** | - C | 9999 | - | CNI-DTM-CNT-TSR-MOA-FTX-SG31-SG32-SG33-SG38-SG43-SG50-SG70 |
| **SG38** | - C | 99 | - | TDT-DTM-SG39-SG40 |
| **SG40** | - C | 9 | - | RFF-DTM |
| **RFF** | - M | 1 | - | Reference |

Function:

To specify a reference.

| | | EDIFACT | GS1 | * | Description |
|---|---|---|---|---|---|
| C506 | REFERENCE | M | **M** | | |
| 1153 | Reference code qualifier | M an..3 | **M** | | AWB = Air waybill number<br>BM = Bill of lading number<br>CMR = Road consignment note number<br>RCN = Railway consignment note number |
| 1154 | Reference identifier | C an..70 | **R** | | |
| 1156 | Document line identifier | C an..6 | **N** | | |
| 4000 | Reference version identifier | C an..35 | **N** | | |
| 1060 | Revision identifier | C an..6 | **N** | | |

Segment Notes:

This segment is used to specify references related to the transport details for the current consignment.

Example:
RFF+AWB:2345362'

## 5. Segments Layout

Segment number: 47

| | | | | |
|---|---|---|---|---|
| **SG25** | - C | 9999 | - | CNI-DTM-CNT-TSR-MOA-FTX-SG31-SG32-SG33-SG38-SG43-SG50-SG70 |
| **SG38** | - C | 99 | - | TDT-DTM-SG39-SG40 |
| **SG40** | - C | 9 | - | RFF-DTM |
| **DTM** | - C | 1 | - | Date/time/period |

Function:

To specify date, and/or time, or period.

| | | EDIFACT | GS1 | * | Description |
|---|---|---|---|---|---|
| C507 | DATE/TIME/PERIOD | M | **M** | | |
| 2005 | Date or time or period function code qualifier | M an..3 | **M** | * | 171 = Reference date/time |
| 2380 | Date or time or period value | C an..35 | **R** | | |
| 2379 | Date or time or period format code | C an..3 | **R** | | 102 = CCYYMMDD<br>203 = CCYYMMDDHHMM<br>718 = CCYYMMDD-CCYYMMDD |

Segment Notes:

This segment is used to specify any dates related to the previous RFF segment.

Example:
DTM+171:20021210:102'

## 5. Segments Layout

Segment number: 48

| | | | |
|---|---|---|---|
| **SG25** | - C | 9999 - | CNI-DTM-CNT-TSR-MOA-FTX-SG31-SG32-SG33-SG38-SG43-SG50-SG70 |
| **SG43** | - C | 99 - | NAD-LOC-MOA-SG44-SG45-SG47 |
| **NAD** | - M | 1 - | Name and address |

Function:

To specify the name/address and their related function, either by C082 only and/or unstructured by C058 or structured by C080 thru 3207.

| | | EDIFACT | GS1 | * | Description |
|---|---|---|---|---|---|
| 3035 | Party function code qualifier | M an..3 | **M** | | CN = Consignee<br>DP = Delivery party<br>FP = Freight/charges payer |
| C082 | PARTY IDENTIFICATION DETAILS | C | **A** | | |
| 3039 | Party identifier | M an..35 | **M** | | For identification of parties it is recommended to use GLN - Format n13. |
| 1131 | Code list identification code | C an..17 | **N** | | |
| 3055 | Code list responsible agency code | C an..3 | **R** | | 9 = GS1 |
| C058 | NAME AND ADDRESS | C | **C** | | |
| 3124 | Name and address description | M an..35 | **M** | | |
| 3124 | Name and address description | C an..35 | **O** | | |
| 3124 | Name and address description | C an..35 | **O** | | |
| 3124 | Name and address description | C an..35 | **O** | | |
| 3124 | Name and address description | C an..35 | **O** | | |
| C080 | PARTY NAME | C | **D** | | |
| 3036 | Party name | M an..35 | **M** | | Party Name in clear text. |
| 3036 | Party name | C an..35 | **O** | | |
| 3036 | Party name | C an..35 | **O** | | |
| 3036 | Party name | C an..35 | **O** | | |
| 3036 | Party name | C an..35 | **O** | | |
| 3045 | Party name format code | C an..3 | **O** | | |
| C059 | STREET | C | **D** | | |
| 3042 | Street and number or post office box identifier | M an..35 | **M** | | Building Name/Number and Street |
| 3042 | Street and number or post office box identifier | C an..35 | **O** | | Name and/or P.O. Box |
| 3042 | Street and number or post office box identifier | C an..35 | **O** | | |
| 3042 | Street and number or post office box identifier | C an..35 | **O** | | |
| 3164 | City name | C an..35 | **D** | | City/Town, clear text |
| C819 | COUNTRY SUB-ENTITY DETAILS | C | **D** | | |
| 3229 | Country sub-entity name code | C an..9 | **O** | | |
| 1131 | Code list identification code | C an..17 | **O** | | |
| | Code list responsible agency | | | | |

## 5. Segments Layout

Segment number: 48

| | | EDIFACT | GS1 | * | Description |
|---|---|---|---|---|---|
| 3055 | code | C an..3 | **O** | | |
| 3228 | Country sub-entity name | C an..70 | **O** | | County/State, clear text. |
| 3251 | Postal identification code | C an..17 | **D** | | Postal Code |
| 3207 | Country name code | C an..3 | **D** | | ISO 3166 two alpha code |

Segment Notes:

This segment is used to identify the consignee for the currently identified consignment.

Example:
NAD+CN+5411234512309::9'

Dependency Notes:
The following composites and data elements are only used when a coded name and address can not be used.
The affected composites and data elements are as follows:
C080 - C059 - 3164 - C819 - 3251 - 3207

## 5. Segments Layout

Segment number: 49

| | | | |
|---|---|---|---|
| **SG25** | - C | 9999 - | CNI-DTM-CNT-TSR-MOA-FTX-SG31-SG32-SG33-SG38-SG43-SG50-SG70 |
| **SG43** | - C | 99 - | NAD-LOC-MOA-SG44-SG45-SG47 |
| **LOC** | - C | 9 - | Place/location identification |

Function:

To identify a place or a location and/or related locations.

| | | EDIFACT | GS1 | * | Description |
|---|---|---|---|---|---|
| 3227 | Location function code qualifier | M an..3 | **M** | * | 7 = Place of delivery<br>10 = Place of acceptance |
| C517 | LOCATION IDENTIFICATION | C | **A** | | |
| 3225 | Location name code | C an..25 | **A** | | GLN - Format n13 |
| 1131 | Code list identification code | C an..17 | **O** | | |
| 3055 | Code list responsible agency code | C an..3 | **D** | | 9 = GS1<br>DE 3055 must be used if DE 3225 is used and does not contain an UN/LOCODE. |
| 3224 | Location name | C an..256 | **O** | | |
| C519 | RELATED LOCATION ONE IDENTIFICATION | C | **N** | | |
| 3223 | First related location name code | C an..25 | | | |
| 1131 | Code list identification code | C an..17 | | | |
| 3055 | Code list responsible agency code | C an..3 | | | |
| 3222 | First related location name | C an..70 | | | |
| C553 | RELATED LOCATION TWO IDENTIFICATION | C | **N** | | |
| 3233 | Second related location name code | C an..25 | | | |
| 1131 | Code list identification code | C an..17 | | | |
| 3055 | Code list responsible agency code | C an..3 | | | |
| 3232 | Second related location name | C an..70 | | | |
| 5479 | Relation code | C an..3 | **N** | | |

Segment Notes:

This segment is used to identify any locations related to the party identified in the NAD segment.
It is recommended to use Global Location Numbers GLN - Format n13 - for the identification of locations.

Example:
LOC+7+5412345678908::9'

## 5. Segments Layout

Segment number: 50

| | | | |
|---|---|---|---|
| **SG25** | - C | 9999 - | CNI-DTM-CNT-TSR-MOA-FTX-SG31-SG32-SG33-SG38-SG43-SG50-SG70 |
| **SG43** | - C | 99 - | NAD-LOC-MOA-SG44-SG45-SG47 |
| **MOA** | - C | 9 - | Monetary amount |

Function:

To specify a monetary amount.

| | | EDIFACT | GS1 | * | Description |
|---|---|---|---|---|---|
| C516 | MONETARY AMOUNT | M | **M** | | |
| 5025 | Monetary amount type code qualifier | M an..3 | **M** | | 22 = Cash on delivery amount<br>50 = Disbursements |
| 5004 | Monetary amount | C n..35 | **R** | | |
| 6345 | Currency identification code | C an..3 | **O** | | |
| 6343 | Currency type code qualifier | C an..3 | **N** | | |
| 4405 | Status description code | C an..3 | **N** | | |

Segment Notes:

This segment is used to indicate monetary amounts for the party receiving the goods.

Example:
MOA+22:15000:EUR'

## 5. Segments Layout

Segment number: 51

| | | | | |
|---|---|---|---|---|
| **SG25** | - C | 9999 | - | CNI-DTM-CNT-TSR-MOA-FTX-SG31-SG32-SG33-SG38-SG43-SG50-SG70 |
| **SG43** | - C | 99 | - | NAD-LOC-MOA-SG44-SG45-SG47 |
| **SG44** | - C | 9 | - | CTA-COM |
| **CTA** | - M | 1 | - | Contact information |

Function:

To identify a person or a department to whom communication should be directed.

| | | EDIFACT | GS1 | * | Description |
|---|---|---|---|---|---|
| 3139 | Contact function code | C an..3 | **R** | | IC = Information contact |
| C056 | DEPARTMENT OR EMPLOYEE DETAILS | C | **O** | | |
| 3413 | Department or employee name code | C an..17 | **O** | | |
| 3412 | Department or employee name | C an..35 | **O** | | |

Segment Notes:

This segment is used to provide department and contact names within the party identified in the NAD segment.

Example:
CTA+TR+:G REID'

## 5. Segments Layout

Segment number: 52

| | | | | |
|---|---|---|---|---|
| **SG25** | - C | 9999 | - | CNI-DTM-CNT-TSR-MOA-FTX-SG31-SG32-SG33-SG38-SG43-SG50-SG70 |
| **SG43** | - C | 99 | - | NAD-LOC-MOA-SG44-SG45-SG47 |
| **SG44** | - C | 9 | - | CTA-COM |
| **COM** | - C | 9 | - | Communication contact |

Function:

To identify a communication number of a department or a person to whom communication should be directed.

| | | EDIFACT | GS1 | * | Description |
|---|---|---|---|---|---|
| C076 | COMMUNICATION CONTACT | M | **M** | | |
| 3148 | Communication address identifier | M an..512 | **M** | | |
| 3155 | Communication address code qualifier | M an..3 | **M** | | EM = Electronic mail<br>TE = Telephone<br>AO = Uniform Resource Location (URL) |

Segment Notes:

This segment identifies the communications number and type of communications for the person or department identified in the previous CTA segment.

Example:
COM+0033148759632:FX'

## 5. Segments Layout

Segment number: 53

| | | | |
|---|---|---|---|
| **SG25** | - C | 9999 - | CNI-DTM-CNT-TSR-MOA-FTX-SG31-SG32-SG33-SG38-SG43-SG50-SG70 |
| **SG43** | - C | 99 - | NAD-LOC-MOA-SG44-SG45-SG47 |
| **SG45** | - C | 9 - | DOC-DTM |
| **DOC** | - M | 1 - | Document/message details |

Function:

To identify documents and details directly related to it.

| | | EDIFACT | GS1 | * | Description |
|---|---|---|---|---|---|
| C002 | DOCUMENT/MESSAGE NAME | M | **M** | | |
| 1001 | Document name code | C an..3 | **R** | | 811 = Export licence<br>911 = Import licence |
| 1131 | Code list identification code | C an..17 | **O** | | |
| 3055 | Code list responsible agency code | C an..3 | **D** | | |
| 1000 | Document name | C an..35 | **N** | | |
| C503 | DOCUMENT/MESSAGE DETAILS | C | **O** | | |
| 1004 | Document identifier | C an..35 | **R** | | |
| 1373 | Document status code | C an..3 | **N** | | |
| 1366 | Document source description | C an..70 | **O** | | |
| 3453 | Language name code | C an..3 | **O** | | ISO 639 two alpha |
| 1056 | Version identifier | C an..9 | **N** | | |
| 1060 | Revision identifier | C an..6 | **N** | | |
| 3153 | Communication medium type code | C an..3 | **N** | | |
| 1220 | Document copies required quantity | C n..2 | **O** | | |
| 1218 | Document originals required quantity | C n..2 | **O** | | |

Segment Notes:

This segment is used to identify any documentation which is required by the party identified in the NAD segment.

Example:
DOC+811+1253D'

## 5. Segments Layout

Segment number: 54

| | | | |
|---|---|---|---|
| **SG25** | - C | 9999 - | CNI-DTM-CNT-TSR-MOA-FTX-SG31-SG32-SG33-SG38-SG43-SG50-SG70 |
| **SG43** | - C | 99 - | NAD-LOC-MOA-SG44-SG45-SG47 |
| **SG45** | - C | 9 - | DOC-DTM |
| **DTM** | - C | 1 - | Date/time/period |

Function:

To specify date, and/or time, or period.

| | | EDIFACT | GS1 | * | Description |
|---|---|---|---|---|---|
| C507 | DATE/TIME/PERIOD | M | **M** | | |
| 2005 | Date or time or period function code qualifier | M an..3 | **M** | * | 7 = Effective date/time<br>36 = Expiry date<br>137 = Document/message date/time<br>273 = Validity period |
| 2380 | Date or time or period value | C an..35 | **R** | | |
| 2379 | Date or time or period format code | C an..3 | **R** | | 102 = CCYYMMDD<br>203 = CCYYMMDDHHMM<br>718 = CCYYMMDD-CCYYMMDD |

Segment Notes:

This segment is used to specify any dates related to the previous DOC segment.

Example:
DTM+137:19931210:102'

## 5. Segments Layout

Segment number: 55

| | | | | |
|---|---|---|---|---|
| **SG25** | - C | 9999 | - | CNI-DTM-CNT-TSR-MOA-FTX-SG31-SG32-SG33-SG38-SG43-SG50-SG70 |
| **SG43** | - C | 99 | - | NAD-LOC-MOA-SG44-SG45-SG47 |
| **SG47** | - C | 9 | - | RFF |
| **RFF** | - M | 1 | - | Reference |

Function:

To specify a reference.

| | | EDIFACT | GS1 | * | Description |
|---|---|---|---|---|---|
| C506 | REFERENCE | M | **M** | | |
| 1153 | Reference code qualifier | M an..3 | **M** | | CT = Contract number |
| 1154 | Reference identifier | C an..70 | **R** | | |
| 1156 | Document line identifier | C an..6 | **N** | | |
| 4000 | Reference version identifier | C an..35 | **N** | | |
| 1060 | Revision identifier | C an..6 | **N** | | |

Segment Notes:

This segment is used to identify any references related to the party identified in the NAD segment which are required but do not accompany the consignment, e.g., contract numbers.

Example:
RFF+CT:6532'

## 5. Segments Layout

Segment number: 56

| | | | |
|---|---|---|---|
| **SG25** | - C | 9999 - | CNI-DTM-CNT-TSR-MOA-FTX-SG31-SG32-SG33-SG38-SG43-SG50-SG70 |
| **SG50** | - C | 999 - | GID-HAN-TMP-RNG-MOA-PIA-FTX-SG51-GDS-SG52-SG53-SG54-SG55-SG56-SG61-SG65 |
| **GID** | - M | 1 - | Goods item details |

Function:

To indicate totals of a goods item.

| | | EDIFACT | GS1 | * | Description |
|---|---|---|---|---|---|
| 1496 | Goods item number | C n..5 | **R** | | Application number identifying the goods item within the current consignment. |
| C213 | NUMBER AND TYPE OF PACKAGES | C | **R** | | |
| 7224 | Package quantity | C n..8 | **R** | | |
| 7065 | Package type description code | C an..17 | **O** | | CT =<br>PK =<br>09 = Returnable pallet (GS1 Temporary Code)<br>201 = Pallet ISO 1 - 1/1 EURO Pallet (GS1 Temporary Code) |
| 1131 | Code list identification code | C an..17 | **N** | | |
| 3055 | Code list responsible agency code | C an..3 | **D** | * | 9 = GS1 |
| 7064 | Type of packages | C an..35 | **N** | | |
| 7233 | Packaging related description code | C an..3 | **N** | | |
| C213 | NUMBER AND TYPE OF PACKAGES | C | **O** | | |
| 7224 | Package quantity | C n..8 | **O** | | |
| 7065 | Package type description code | C an..17 | **O** | | CT =<br>PK =<br>09 = Returnable pallet (GS1 Temporary Code)<br>201 = Pallet ISO 1 - 1/1 EURO Pallet (GS1 Temporary Code) |
| 1131 | Code list identification code | C an..17 | **N** | | |
| 3055 | Code list responsible agency code | C an..3 | **D** | * | 9 = GS1 |
| 7064 | Type of packages | C an..35 | **N** | | |
| 7233 | Packaging related description code | C an..3 | **N** | | |
| C213 | NUMBER AND TYPE OF PACKAGES | C | **O** | | |
| 7224 | Package quantity | C n..8 | **O** | | |
| 7065 | Package type description code | C an..17 | **O** | | CT =<br>PK =<br>09 = Returnable pallet (GS1 Temporary Code)<br>201 = Pallet ISO 1 - 1/1 EURO Pallet (GS1 Temporary Code) |

## 5. Segments Layout

| | | | | | |
|---|---|---|---|---|---|
| 1131 | Code list identification code | C an..17 | **N** | | |

## 5. Segments Layout

Segment number: 56

| | | EDIFACT | GS1 | * | Description |
|---|---|---|---|---|---|
| 3055 | Code list responsible agency code | C an..3 | **D** | * | 9 = GS1 |
| 7064 | Type of packages | C an..35 | **N** | | |
| 7233 | Packaging related description code | C an..3 | **N** | | |
| C213 | NUMBER AND TYPE OF PACKAGES | C | **O** | | |
| 7224 | Package quantity | C n..8 | **O** | | |
| 7065 | Package type description code | C an..17 | **O** | | CT =<br>PK =<br>09 = Returnable pallet (GS1 Temporary Code)<br>201 = Pallet ISO 1 - 1/1 EURO Pallet (GS1 Temporary Code) |
| 1131 | Code list identification code | C an..17 | **N** | | |
| 3055 | Code list responsible agency code | C an..3 | **D** | * | 9 = GS1 |
| 7064 | Type of packages | C an..35 | **N** | | |
| 7233 | Packaging related description code | C an..3 | **N** | | |
| C213 | NUMBER AND TYPE OF PACKAGES | C | **O** | | |
| 7224 | Package quantity | C n..8 | **O** | | |
| 7065 | Package type description code | C an..17 | **O** | | CT =<br>PK =<br>09 = Returnable pallet (GS1 Temporary Code)<br>201 = Pallet ISO 1 - 1/1 EURO Pallet (GS1 Temporary Code) |
| 1131 | Code list identification code | C an..17 | **N** | | |
| 3055 | Code list responsible agency code | C an..3 | **D** | * | 9 = GS1 |
| 7064 | Type of packages | C an..35 | **N** | | |
| 7233 | Packaging related description code | C an..3 | **N** | | |

Segment Notes:

This segment is used to specify the number and type of packages which make up a goods item in the current consignment.
Within the GID segment it is possible to identify up to 3 levels of packaging hierarchy for the transport goods item.
Despatch units are identified in the first occurence of C213.

Example:
GID+1+1:09::9+6:CT'
(The top level is 1 returnable pallet containing a second level of 6 cartons.)

Dependency note:
DE 3055: This data element is only used with the code value '9' if an GS1 code is used in data element 7065.

## 5. Segments Layout

Segment number: 57

| | | | |
|---|---|---|---|
| **SG25** | - C | 9999 - | CNI-DTM-CNT-TSR-MOA-FTX-SG31-SG32-SG33-SG38-SG43-SG50-SG70 |
| **SG50** | - C | 999 - | GID-HAN-TMP-RNG-MOA-PIA-FTX-SG51-GDS-SG52-SG53-SG54-SG55-SG56-SG61-SG65 |
| **HAN** | - C | 1 - | Handling instructions |

Function:

To specify handling and where necessary, notify hazards.

| | | EDIFACT | GS1 | * | Description |
|---|---|---|---|---|---|
| C524 | HANDLING INSTRUCTIONS | C | **O** | | |
| 4079 | Handling instruction description code | C an..3 | **R** | | BIG = Outsized (GS1 Temporary Code)<br>CRU = Crushable (GS1 Temporary Code)<br>EAT = Foodstuffs (GS1 Temporary Code)<br>HWC = Handle with care (GS1 Temporary Code)<br>STR = Stacking restricted (GS1 Temporary Code)<br>UST = Unstackable (GS1 Temporary Code) |
| 1131 | Code list identification code | C an..17 | **A** | | |
| 3055 | Code list responsible agency code | C an..3 | **D** | * | 9 = GS1<br>60 = Assigned by national trade agency<br>DE 3055 must be used if DE 4079 is used and does not contain an EDIFACT code. |
| 4078 | Handling instruction description | C an..70 | **O** | | |
| C218 | HAZARDOUS MATERIAL | C | **O** | | The identification of hazardous materials is carried out using the DGS and FTX segments in the CNI level. |
| 7419 | Hazardous material category name code | C an..7 | **D** | | The preferred way to provide 'ADR international classification' or 'Hazardous material standard text' is to use DE 1131. |
| 1131 | Code list identification code | C an..17 | **O** | | ADR = Accord Europeen au transport international dangereuses (GS1 Temporary Code)<br>HMT = Hazardous material standard text (GS1 Temporary Code) |
| 3055 | Code list responsible agency code | C an..3 | **D** | * | 9 = GS1 |
| 7418 | Hazardous material category name | C an..35 | **O** | | To be used when no code value is available for DE7419. |

Segment Notes:

This segment is used to provide a handling instruction relevant to the transport line item identified in the GID segment.

Example:
HAN+EAT::9'

## 5. Segments Layout

Segment number: 58

| | | | |
|---|---|---|---|
| **SG25** | - C | 9999 - | CNI-DTM-CNT-TSR-MOA-FTX-SG31-SG32-SG33-SG38-SG43-SG50-SG70 |
| **SG50** | - C | 999 - | GID-HAN-TMP-RNG-MOA-PIA-FTX-SG51-GDS-SG52-SG53-SG54-SG55-SG56-SG61-SG65 |
| **TMP** | - C | 1 - | Temperature |

Function:

To specify the temperature setting.

| | | EDIFACT | GS1 | * | Description |
|---|---|---|---|---|---|
| 6245 | Temperature type code qualifier | M an..3 | **M** | | 1 = Storage temperature<br>2 = Transport temperature |
| C239 | TEMPERATURE SETTING | C | **A** | | |
| 6246 | Temperature value | C n..15 | **R** | | |
| 6411 | Measurement unit code | C an..3 | **R** | | CEL = degree celsius<br>FAH = degree Fahrenheit |

Segment Notes:

This segment is used to specify a temperature setting related to the current goods item.

Example:
TMP+1+40:CEL'

## 5. Segments Layout

Segment number: 59

| | | | |
|---|---|---|---|
| **SG25** | - C | 9999 - | CNI-DTM-CNT-TSR-MOA-FTX-SG31-SG32-SG33-SG38-SG43-SG50-SG70 |
| **SG50** | - C | 999 - | GID-HAN-TMP-RNG-MOA-PIA-FTX-SG51-GDS-SG52-SG53-SG54-SG55-SG56-SG61-SG65 |
| **RNG** | - C | 1 - | Range details |

Function:

To identify a range.

| | | EDIFACT | GS1 | * | Description |
|---|---|---|---|---|---|
| 6167 | Range type code qualifier | M an..3 | **M** | * | 5 = Temperature range |
| C280 | RANGE | C | **R** | | |
| 6411 | Measurement unit code | M an..3 | **M** | | CEL = degree celsius<br>FAH = degree Fahrenheit |
| 6162 | Range minimum value | C n..18 | **O** | | |
| 6152 | Range maximum value | C n..18 | **O** | | |

Segment Notes:

This segment is used to specify a temperature range for the current goods item.

Example:
RNG+5+CEL:40:45'

## 5. Segments Layout

Segment number: 60

| | | | |
|---|---|---|---|
| **SG25** | - C | 9999 - | CNI-DTM-CNT-TSR-MOA-FTX-SG31-SG32-SG33-SG38-SG43-SG50-SG70 |
| **SG50** | - C | 999 - | GID-HAN-TMP-RNG-MOA-PIA-FTX-SG51-GDS-SG52-SG53-SG54-SG55-SG56-SG61-SG65 |
| **MOA** | - C | 9 - | Monetary amount |

Function:

To specify a monetary amount.

| | | EDIFACT | GS1 | * | Description |
|---|---|---|---|---|---|
| C516 | MONETARY AMOUNT | M | **M** | | |
| 5025 | Monetary amount type code qualifier | M an..3 | **M** | | 40 = Customs value<br>44 = Declared value for carriage<br>157 = Insurance value |
| 5004 | Monetary amount | C n..35 | **R** | | |
| 6345 | Currency identification code | C an..3 | **O** | | ISO 4217 three alpha |
| 6343 | Currency type code qualifier | C an..3 | **N** | | |
| 4405 | Status description code | C an..3 | **N** | | |

Segment Notes:

This segment is used to specify the value of the current goods item for customs, insurance or other valuation purposes.

Example:
MOA+40:45300:EUR'

## 5. Segments Layout

Segment number: 61

| | | | |
|---|---|---|---|
| **SG25** | - C | 9999 - | CNI-DTM-CNT-TSR-MOA-FTX-SG31-SG32-SG33-SG38-SG43-SG50-SG70 |
| **SG50** | - C | 999 - | GID-HAN-TMP-RNG-MOA-PIA-FTX-SG51-GDS-SG52-SG53-SG54-SG55-SG56-SG61-SG65 |
| **PIA** | - C | 9 - | Additional product id |

Function:

To specify additional or substitutional item identification codes.

| | | EDIFACT | GS1 | * | Description |
|---|---|---|---|---|---|
| 4347 | Product identifier code qualifier | M an..3 | **M** | * | 1 = Additional identification<br>5 = Product identification<br>Product Id function, coded has the following restricted coded function:<br>1 = Additional Identification - To provide an additional identity of the current goods item identified in the GID segment, e.g. Harmonised system code.<br>5 = Product Identification - To provide the GTIN of the products contained in the current goods item identified in the GID segment. |
| C212 | ITEM NUMBER IDENTIFICATION | M | **M** | | |
| 7140 | Item identifier | C an..35 | **R** | | |
| 7143 | Item type identification code | C an..3 | **R** | | HS = Harmonised system<br>SRV = GS1 Global Trade Item Number |
| 1131 | Code list identification code | C an..17 | **O** | | |
| 3055 | Code list responsible agency code | C an..3 | **D** | | 9 = GS1<br>89 = Assigned by distributor<br>91 = Assigned by supplier or supplier's agent<br>92 = Assigned by buyer or buyer's agent |
| C212 | ITEM NUMBER IDENTIFICATION | C | **O** | | |
| 7140 | Item identifier | C an..35 | **R** | | |
| 7143 | Item type identification code | C an..3 | **R** | | |
| 1131 | Code list identification code | C an..17 | **O** | | |
| 3055 | Code list responsible agency code | C an..3 | **D** | | |
| C212 | ITEM NUMBER IDENTIFICATION | C | **O** | | |
| 7140 | Item identifier | C an..35 | **R** | | |
| 7143 | Item type identification code | C an..3 | **R** | | |
| 1131 | Code list identification code | C an..17 | **O** | | |
| 3055 | Code list responsible agency code | C an..3 | **D** | | |
| C212 | ITEM NUMBER IDENTIFICATION | C | **O** | | |
| 7140 | Item identifier | C an..35 | **R** | | |
| 7143 | Item type identification code | C an..3 | **R** | | |
| 1131 | Code list identification code | C an..17 | **O** | | |
| 3055 | Code list responsible agency code | C an..3 | **D** | | |

## 5. Segments Layout

Segment number: 61

| | | EDIFACT | GS1 | * | Description |
|---|---|---|---|---|---|
| C212 | ITEM NUMBER IDENTIFICATION | C | **O** | | |
| 7140 | Item identifier | C an..35 | **R** | | |
| 7143 | Item type identification code | C an..3 | **R** | | |
| 1131 | Code list identification code | C an..17 | **O** | | |
| 3055 | Code list responsible agency code | C an..3 | **D** | | |

Segment Notes:

This segment is used to specify additional product identification codes for the current goods item.
Code values provided in this segment are provided for information purposes and not for the identification of the goods to be consigned. The identification of the goods to be consigned is carried out in the GID segment.

Example:
PIA+1+HS003211:HS'

## 5. Segments Layout

Segment number: 62

| | | | |
|---|---|---|---|
| **SG25** | - C | 9999 - | CNI-DTM-CNT-TSR-MOA-FTX-SG31-SG32-SG33-SG38-SG43-SG50-SG70 |
| **SG50** | - C | 999 - | GID-HAN-TMP-RNG-MOA-PIA-FTX-SG51-GDS-SG52-SG53-SG54-SG55-SG56-SG61-SG65 |
| **FTX** | - C | 9 - | Free text |

Function:

To provide free form or coded text information.

| | | EDIFACT | GS1 | * | Description |
|---|---|---|---|---|---|
| 4451 | Text subject code qualifier | M an..3 | **M** | | AAA = Goods description<br>AAI = General information |
| 4453 | Free text function code | C an..3 | **O** | | 1 = Text for subsequent use |
| C107 | TEXT REFERENCE | C | **D** | | This composite is only used when trading partners have agreed to use mutually defined code values. |
| 4441 | Free text value code | M an..17 | **M** | | |
| 1131 | Code list identification code | C an..17 | **O** | | |
| 3055 | Code list responsible agency code | C an..3 | **D** | | 9 = GS1<br>91 = Assigned by supplier or supplier's agent<br>92 = Assigned by buyer or buyer's agent |
| C108 | TEXT LITERAL | C | **D** | | This composite is only used if coded text can not be used. |
| 4440 | Free text value | M an..512 | **M** | | |
| 4440 | Free text value | C an..512 | **O** | | |
| 4440 | Free text value | C an..512 | **O** | | |
| 4440 | Free text value | C an..512 | **O** | | |
| 4440 | Free text value | C an..512 | **O** | | |
| 3453 | Language name code | C an..3 | **D** | | ISO 639 two alpha code<br>This data element is only used when non coded free text has been provided in data element C108. |
| 4447 | Free text format code | C an..3 | **N** | | |

Segment Notes:

This segment is used to provide free form or coded text information related to the goods item.
Use of this segment in free form is not recommended since it may inhibit automatic processing of the Forwarding and Consolidation Summary. Coded references to standard texts is an available functionality which enables automatic processing and reduces transmission overheads. Standard texts should be mutually defined between trading partners and can be used to cover legal or other requirements.

Example:
FTX+AAA+++SPARE PARTS COMPUTER MB'

## 5. Segments Layout

Segment number: 63

| | | | |
|---|---|---|---|
| **SG25** | - C | 9999 - | CNI-DTM-CNT-TSR-MOA-FTX-SG31-SG32-SG33-SG38-SG43-SG50-SG70 |
| **SG50** | - C | 999 - | GID-HAN-TMP-RNG-MOA-PIA-FTX-SG51-GDS-SG52-SG53-SG54-SG55-SG56-SG61-SG65 |
| **SG51** | - C | 9 - | NAD-DTM |
| **NAD** | - M | 1 - | Name and address |

Function:

To specify the name/address and their related function, either by C082 only and/or unstructured by C058 or structured by C080 thru 3207.

| | | EDIFACT | GS1 | * | Description |
|---|---|---|---|---|---|
| 3035 | Party function code qualifier | M an..3 | **M** | * | DP = Delivery party<br>PW = Despatch party<br>SU = Supplier |
| C082 | PARTY IDENTIFICATION DETAILS | C | **A** | | |
| 3039 | Party identifier | M an..35 | **M** | | For identification of parties it is recommended to use GLN - Format n13. |
| 1131 | Code list identification code | C an..17 | **N** | | |
| 3055 | Code list responsible agency code | C an..3 | **R** | * | 9 = GS1 |
| C058 | NAME AND ADDRESS | C | **O** | | This composite may only be used to fulfill the requirements of directive 2003/58/EC, article 4. |
| 3124 | Name and address description | M an..35 | **M** | | |
| 3124 | Name and address description | C an..35 | **O** | | |
| 3124 | Name and address description | C an..35 | **O** | | |
| 3124 | Name and address description | C an..35 | **O** | | |
| 3124 | Name and address description | C an..35 | **O** | | |
| C080 | PARTY NAME | C | **D** | | |
| 3036 | Party name | M an..35 | **M** | | Party Name in clear text. |
| 3036 | Party name | C an..35 | **O** | | |
| 3036 | Party name | C an..35 | **O** | | |
| 3036 | Party name | C an..35 | **O** | | |
| 3036 | Party name | C an..35 | **O** | | |
| 3045 | Party name format code | C an..3 | **O** | | |
| C059 | STREET | C | **D** | | |
| 3042 | Street and number or post office box identifier | M an..35 | **M** | | Building Name/Number and Street |
| 3042 | Street and number or post office box identifier | C an..35 | **O** | | Name and/or P.O. Box |
| 3042 | Street and number or post office box identifier | C an..35 | **O** | | |
| 3042 | Street and number or post office box identifier | C an..35 | **O** | | |
| 3164 | City name | C an..35 | **D** | | City/Town, clear text. |
| C819 | COUNTRY SUB-ENTITY DETAILS | C | **D** | | |

## 5. Segments Layout

Segment number: 63

| | | EDIFACT | GS1 | * | Description |
|---|---|---|---|---|---|
| 3229 | Country sub-entity name code | C an..9 | **O** | | |
| 1131 | Code list identification code | C an..17 | **O** | | |
| 3055 | Code list responsible agency code | C an..3 | **O** | | |
| 3228 | Country sub-entity name | C an..70 | **O** | | County/State, clear text. |
| 3251 | Postal identification code | C an..17 | **D** | | Postal Code |
| 3207 | Country name code | C an..3 | **D** | | ISO 3166 two alpha code |

Segment Notes:

This segment is used to specify the delivery and despatch parties for the current goods item.
Only two repeats of this segment are allowed per goods item.

Example:
NAD+PW+5411234512309::9'
NAD+DP+5412345123453::9'

Dependency Notes:
The following composites and data elements are only used when a coded name and address can not be used.
The affected composites and data elements are as follows:
C080 - C059 - 3164 - C819 - 3251 - 3207

## 5. Segments Layout

Segment number: 64

| | | | |
|---|---|---|---|
| **SG25** | - C | 9999 - | CNI-DTM-CNT-TSR-MOA-FTX-SG31-SG32-SG33-SG38-SG43-SG50-SG70 |
| **SG50** | - C | 999 - | GID-HAN-TMP-RNG-MOA-PIA-FTX-SG51-GDS-SG52-SG53-SG54-SG55-SG56-SG61-SG65 |
| **SG51** | - C | 9 - | NAD-DTM |
| **DTM** | - C | 1 - | Date/time/period |

Function:

To specify date, and/or time, or period.

| | | EDIFACT | GS1 | * | Description |
|---|---|---|---|---|---|
| C507 | DATE/TIME/PERIOD | M | **M** | | |
| 2005 | Date or time or period function code qualifier | M an..3 | **M** | * | 2 = Delivery date/time, requested<br>10 = Shipment date/time, requested<br>63 = Delivery date/time, latest<br>64 = Delivery date/time, earliest<br>191 = Delivery date/time, expected<br>200 = Pick-up/collection date/time of cargo |
| 2380 | Date or time or period value | C an..35 | **R** | | |
| 2379 | Date or time or period format code | C an..3 | **R** | | 102 = CCYYMMDD<br>203 = CCYYMMDDHHMM<br>718 = CCYYMMDD-CCYYMMDD |

Segment Notes:

This segment is used to specify dates and times related to the despatch or delivery parties specified in the previous NAD segment.

Example:
DTM+191:19960120:102'

## 5. Segments Layout

Segment number: 65

| | | | |
|---|---|---|---|
| **SG25** | - C | 9999 - | CNI-DTM-CNT-TSR-MOA-FTX-SG31-SG32-SG33-SG38-SG43-SG50-SG70 |
| **SG50** | - C | 999 - | GID-HAN-TMP-RNG-MOA-PIA-FTX-SG51-GDS-SG52-SG53-SG54-SG55-SG56-SG61-SG65 |
| **GDS** | - C | 9 - | Nature of cargo |

Function:

To indicate the type of cargo as a general classification.

| | | EDIFACT | GS1 | * | Description |
|---|---|---|---|---|---|
| C703 | NATURE OF CARGO | C | **R** | | |
| 7085 | Cargo type classification code | M an..3 | **M** | | 11 = Hazardous cargo<br>12 = General cargo |
| 1131 | Code list identification code | C an..17 | **O** | | |
| 3055 | Code list responsible agency code | C an..3 | **D** | | |

Segment Notes:

This segment is used to specify the exact nature of the goods.

Example:
GDS+11'

## 5. Segments Layout

Segment number: 66

| | | | |
|---|---|---|---|
| **SG25** | - C | 9999 - | CNI-DTM-CNT-TSR-MOA-FTX-SG31-SG32-SG33-SG38-SG43-SG50-SG70 |
| **SG50** | - C | 999 - | GID-HAN-TMP-RNG-MOA-PIA-FTX-SG51-GDS-SG52-SG53-SG54-SG55-SG56-SG61-SG65 |
| **SG52** | - C | 99 - | MEA-EQN |
| **MEA** | - M | 1 - | Measurements |

Function:

To specify physical measurements, including dimension tolerances, weights and counts.

| | | EDIFACT | GS1 | * | Description |
|---|---|---|---|---|---|
| 6311 | Measurement purpose code qualifier | M an..3 | **M** | | AAE = Measurement<br>LMT = Loading metre |
| C502 | MEASUREMENT DETAILS | C | **A** | | |
| 6313 | Measured attribute code | C an..3 | **A** | | AAB = Unit gross weight<br>AAW = Gross volume<br>G = Gross weight<br>AFF = Gross measure cube<br>LN = Length dimension<br>NPP = Number of pallet places (GS1 Temporary Code)<br>PMC = Package net measurement cube (GS1 Temporary Code)<br>T = Tare weight<br>This qualifier determines the measurement value to be applied either to one single despatch unit of the goods item or to a number of despatch units of the goods item.<br>When Unit Gross Weight is provided in this segment the measurement provided relates to the total gross weight of one single despatch unit in the goods item. The number of despatch units of the goods item that all have the same quoted gross weight is specified in the EQN segment when different from the number of despatch units specified in the GID segment.<br>When Gross Weight is provided the measurement relates to the total gross weight of a number of despatch units in the goods item. The number of despatch units of the goods item that together have the quoted gross weight is specified in the EQN segment when different from the number of despatch units specified in the GID segment. |
| 6321 | Measurement significance code | C an..3 | **O** | | 3 = Approximately<br>4 = Equal to |
| 6155 | Non-discrete measurement name code | C an..17 | **N** | | |
| 6154 | Non-discrete measurement name | C an..70 | **N** | | |
| C174 | VALUE/RANGE | C | **R** | | |
| 6411 | Measurement unit code | M an..3 | **M** | | MTR = metre<br>MTQ = cubic metre<br>KGM = kilogram<br>LTR = litre<br>H87 = Piece |
| 6314 | Measurement value | C an..18 | **O** | | |

## 5. Segments Layout

Segment number: 66

| | | EDIFACT | GS1 | * | Description |
|---|---|---|---|---|---|
| 6162 | Range minimum value | C n..18 | **O** | | |
| 6152 | Range maximum value | C n..18 | **O** | | |
| 6432 | Significant digits quantity | C n..2 | **O** | | |
| 7383 | Surface or layer code | C an..3 | **N** | | |

Segment Notes:

This segment is used to specify a measurement for the goods identified in the GID segment. All measurements given in the MEA segments relate to the highest level of packaging (the despatch units) identified in the GID segment.

Example:
MEA+AAE+G+KGM:1600'

## 5. Segments Layout

Segment number: 67

| | | | | |
|---|---|---|---|---|
| **SG25** | - C | 9999 | - | CNI-DTM-CNT-TSR-MOA-FTX-SG31-SG32-SG33-SG38-SG43-SG50-SG70 |
| **SG50** | - C | 999 | - | GID-HAN-TMP-RNG-MOA-PIA-FTX-SG51-GDS-SG52-SG53-SG54-SG55-SG56-SG61-SG65 |
| **SG52** | - C | 99 | - | MEA-EQN |
| **EQN** | - C | 1 | - | Number of units |

Function:

To specify the number of units.

| | | EDIFACT | GS1 | * | Description |
|---|---|---|---|---|---|
| C523 | NUMBER OF UNIT DETAILS | M | **M** | | |
| 6350 | Units quantity | C n..15 | **R** | | |
| 6353 | Unit type code qualifier | C an..3 | **N** | | |

Segment Notes:

This segment is used to specify the number of packages (despatch units) within the goods item to which the measurement applies.

Example:
EQN+10'

## 5. Segments Layout

Segment number: 68

| | | | |
|---|---|---|---|
| **SG25** | - C | 9999 - | CNI-DTM-CNT-TSR-MOA-FTX-SG31-SG32-SG33-SG38-SG43-SG50-SG70 |
| **SG50** | - C | 999 - | GID-HAN-TMP-RNG-MOA-PIA-FTX-SG51-GDS-SG52-SG53-SG54-SG55-SG56-SG61-SG65 |
| **SG53** | - C | 99 - | DIM-EQN |
| **DIM** | - M | 1 - | Dimensions |

Function:

To specify dimensions.

| | | EDIFACT | GS1 | * | Description |
|---|---|---|---|---|---|
| 6145 | Dimension type code qualifier | M an..3 | **M** | * | 1 = Gross dimensions<br>10E = Unit gross dimensions (GS1 Temporary Code)<br>This qualifier determines the dimension values to be applied either to one single despatch unit of the goods item or to a number of despatch units of the goods item.<br>When Unit Gross Dimensions are provided in this segment the dimension values provided relate to the total gross dimensions of one single despatch unit in the goods item. The number of despatch units of the goods item that all have the same quoted gross dimensions is specified in the EQN segment when different from the number of despatch units specified in the GID segment.<br>When Gross Dimensions are provided the dimension values relate to the total gross weight of a number of despatch units in the goods item. The number of despatch units of the goods item that together have the quoted gross dimension is specified in the EQN segment when different from the number of despatch units specified in the GID segment. |
| C211 | DIMENSIONS | M | **M** | | |
| 6411 | Measurement unit code | M an..3 | **M** | | MTR = metre |
| 6168 | Length dimension value | C n..15 | **O** | | |
| 6140 | Width dimension value | C n..15 | **O** | | |
| 6008 | Height dimension value | C n..15 | **O** | | |

Segment Notes:

This segment is used to indicate the dimensions of the goods item identified in the GID segment. All dimensions given in the DIM segments relate to the highest level packaging (the despatch units) identified in the GID segment.

Example:
DIM+1+MTR:4:2:2'

## 5. Segments Layout

Segment number: 69

| | | | | |
|---|---|---|---|---|
| **SG25** | - C | 9999 | - | CNI-DTM-CNT-TSR-MOA-FTX-SG31-SG32-SG33-SG38-SG43-SG50-SG70 |
| **SG50** | - C | 999 | - | GID-HAN-TMP-RNG-MOA-PIA-FTX-SG51-GDS-SG52-SG53-SG54-SG55-SG56-SG61-SG65 |
| **SG53** | - C | 99 | - | DIM-EQN |
| **EQN** | - C | 1 | - | Number of units |

Function:

To specify the number of units.

| | | EDIFACT | GS1 | * | Description |
|---|---|---|---|---|---|
| C523 | NUMBER OF UNIT DETAILS | M | **M** | | |
| 6350 | Units quantity | C n..15 | **R** | | The value expressed in this data element must be the sum of all the values of DE 7224 in the first occurence of C213 in the GID segment throughout the message. |
| 6353 | Unit type code qualifier | C an..3 | **N** | | |

Segment Notes:

This segment is used to specify the number of packages (despatch units) within the goods items to which the dimensions apply.

Example:
EQN+40'

## 5. Segments Layout

Segment number: 70

| | | | | |
|---|---|---|---|---|
| **SG25** | - C | 9999 | - | CNI-DTM-CNT-TSR-MOA-FTX-SG31-SG32-SG33-SG38-SG43-SG50-SG70 |
| **SG50** | - C | 999 | - | GID-HAN-TMP-RNG-MOA-PIA-FTX-SG51-GDS-SG52-SG53-SG54-SG55-SG56-SG61-SG65 |
| **SG54** | - C | 9 | - | RFF-DTM |
| **RFF** | - M | 1 | - | Reference |

Function:

To specify a reference.

| | | EDIFACT | GS1 | * | Description |
|---|---|---|---|---|---|
| C506 | REFERENCE | M | **M** | | |
| 1153 | Reference code qualifier | M an..3 | **M** | | CT = Contract number |
| 1154 | Reference identifier | C an..70 | **R** | | |
| 1156 | Document line identifier | C an..6 | **N** | | |
| 4000 | Reference version identifier | C an..35 | **N** | | |
| 1060 | Revision identifier | C an..6 | **N** | | |

Segment Notes:

This segment is used to specify references which are applicable to the current goods item only. The references specified will override those provided in group 32 when the same qualifier is used.

Example:
RFF+CT:52441'

## 5. Segments Layout

Segment number: 71

| | | | | |
|---|---|---|---|---|
| **SG25** | - C | 9999 | - | CNI-DTM-CNT-TSR-MOA-FTX-SG31-SG32-SG33-SG38-SG43-SG50-SG70 |
| **SG50** | - C | 999 | - | GID-HAN-TMP-RNG-MOA-PIA-FTX-SG51-GDS-SG52-SG53-SG54-SG55-SG56-SG61-SG65 |
| **SG54** | - C | 9 | - | RFF-DTM |
| **DTM** | - C | 9 | - | Date/time/period |

Function:

To specify date, and/or time, or period.

| | | EDIFACT | GS1 | * | Description |
|---|---|---|---|---|---|
| C507 | DATE/TIME/PERIOD | M | **M** | | |
| 2005 | Date or time or period function code qualifier | M an..3 | **M** | * | 171 = Reference date/time |
| 2380 | Date or time or period value | C an..35 | **R** | | |
| 2379 | Date or time or period format code | C an..3 | **R** | | 102 = CCYYMMDD |

Segment Notes:

This segment is used to indicate dates relevant to the references specified in the previous RFF segment.

Example:
DTM+171:19960110:102'

## 5. Segments Layout

Segment number: 72

| | | | |
|---|---|---|---|
| **SG25** | - C | 9999 - | CNI-DTM-CNT-TSR-MOA-FTX-SG31-SG32-SG33-SG38-SG43-SG50-SG70 |
| **SG50** | - C | 999 - | GID-HAN-TMP-RNG-MOA-PIA-FTX-SG51-GDS-SG52-SG53-SG54-SG55-SG56-SG61-SG65 |
| **SG55** | - C | 999 - | PCI-GIN |
| **PCI** | - M | 1 - | Package identification |

Function:

To specify markings and labels on individual packages or physical units.

| | | EDIFACT | GS1 | * | Description |
|---|---|---|---|---|---|
| 4233 | Marking instructions code | C an..3 | **R** | | 17 = Supplier's instructions<br>18 = Carrier's instructions<br>33E = Marked with serial shipping container code (GS1 Temporary Code) |
| C210 | MARKS & LABELS | C | **O** | | |
| 7102 | Shipping marks description | M an..35 | **M** | | |
| 7102 | Shipping marks description | C an..35 | **O** | | |
| 7102 | Shipping marks description | C an..35 | **O** | | |
| 7102 | Shipping marks description | C an..35 | **O** | | |
| 7102 | Shipping marks description | C an..35 | **O** | | |
| 7102 | Shipping marks description | C an..35 | **O** | | |
| 7102 | Shipping marks description | C an..35 | **O** | | |
| 7102 | Shipping marks description | C an..35 | **O** | | |
| 7102 | Shipping marks description | C an..35 | **O** | | |
| 7102 | Shipping marks description | C an..35 | **O** | | |
| 8275 | Container or package contents indicator code | C an..3 | **N** | | |
| C827 | TYPE OF MARKING | C | **N** | | |
| 7511 | Marking type code | M an..3 | | | |
| 1131 | Code list identification code | C an..17 | | | |
| 3055 | Code list responsible agency code | C an..3 | | | |

Segment Notes:

This segment is used to specify what markings and labels are marked on the packaging of the current goods item.

Example:
PCI+33E'

## 5. Segments Layout

Segment number: 73

| | | | |
|---|---|---|---|
| **SG25** | - C | 9999 - | CNI-DTM-CNT-TSR-MOA-FTX-SG31-SG32-SG33-SG38-SG43-SG50-SG70 |
| **SG50** | - C | 999 - | GID-HAN-TMP-RNG-MOA-PIA-FTX-SG51-GDS-SG52-SG53-SG54-SG55-SG56-SG61-SG65 |
| **SG55** | - C | 999 - | PCI-GIN |
| **GIN** | - C | 9 - | Goods identity number |

Function:

To give specific identification numbers, either as single numbers or ranges.

| | | EDIFACT | GS1 | * | Description |
|---|---|---|---|---|---|
| 7405 | Object identification code qualifier | M an..3 | **M** | * | BJ = Serial shipping container code<br>In EANCOM it is recommended to use the Serial Shipping Container Code (SSCC) for the unique identification of individual transport packages. |
| C208 | IDENTITY NUMBER RANGE | M | **M** | | |
| 7402 | Object identifier | M an..35 | **M** | | |
| 7402 | Object identifier | C an..35 | **O** | | |
| C208 | IDENTITY NUMBER RANGE | C | **O** | | |
| 7402 | Object identifier | M an..35 | **M** | | |
| 7402 | Object identifier | C an..35 | **O** | | |
| C208 | IDENTITY NUMBER RANGE | C | **O** | | |
| 7402 | Object identifier | M an..35 | **M** | | |
| 7402 | Object identifier | C an..35 | **O** | | |
| C208 | IDENTITY NUMBER RANGE | C | **O** | | |
| 7402 | Object identifier | M an..35 | **M** | | |
| 7402 | Object identifier | C an..35 | **O** | | |
| C208 | IDENTITY NUMBER RANGE | C | **O** | | |
| 7402 | Object identifier | M an..35 | **M** | | |
| 7402 | Object identifier | C an..35 | **O** | | |

Segment Notes:

This segment is used to provide the Serial Shipping Container Code which has been marked on the packaging of the current goods item.

Example:
GIN+BJ+354123450000000014'

## 5. Segments Layout

Segment number: 74

| | | | |
|---|---|---|---|
| **SG25** | - C | 9999 - | CNI-DTM-CNT-TSR-MOA-FTX-SG31-SG32-SG33-SG38-SG43-SG50-SG70 |
| **SG50** | - C | 999 - | GID-HAN-TMP-RNG-MOA-PIA-FTX-SG51-GDS-SG52-SG53-SG54-SG55-SG56-SG61-SG65 |
| **SG56** | - C | 9 - | DOC-DTM |
| **DOC** | - M | 1 - | Document/message details |

Function:

To identify documents and details directly related to it.

| | | EDIFACT | GS1 | * | Description |
|---|---|---|---|---|---|
| C002 | DOCUMENT/MESSAGE NAME | M | **M** | | |
| 1001 | Document name code | C an..3 | **R** | | 811 = Export licence<br>911 = Import licence |
| 1131 | Code list identification code | C an..17 | **O** | | |
| 3055 | Code list responsible agency code | C an..3 | **D** | | |
| 1000 | Document name | C an..35 | **N** | | |
| C503 | DOCUMENT/MESSAGE DETAILS | C | **O** | | |
| 1004 | Document identifier | C an..35 | **R** | | |
| 1373 | Document status code | C an..3 | **O** | | 2 = Accompanying goods<br>9 = To be printed<br>17 = Document with the goods |
| 1366 | Document source description | C an..70 | **O** | | |
| 3453 | Language name code | C an..3 | **O** | | ISO 639 two alpha |
| 1056 | Version identifier | C an..9 | **N** | | |
| 1060 | Revision identifier | C an..6 | **N** | | |
| 3153 | Communication medium type code | C an..3 | **N** | | |
| 1220 | Document copies required quantity | C n..2 | **O** | | |
| 1218 | Document originals required quantity | C n..2 | **O** | | |

Segment Notes:

This segment is used to specify documents which are required for the current goods item only and which must accompany the goods during transport.

Example:
DOC+811+52441'

## 5. Segments Layout

Segment number: 75

| | | | |
|---|---|---|---|
| **SG25** | - C | 9999 - | CNI-DTM-CNT-TSR-MOA-FTX-SG31-SG32-SG33-SG38-SG43-SG50-SG70 |
| **SG50** | - C | 999 - | GID-HAN-TMP-RNG-MOA-PIA-FTX-SG51-GDS-SG52-SG53-SG54-SG55-SG56-SG61-SG65 |
| **SG56** | - C | 9 - | DOC-DTM |
| **DTM** | - C | 9 - | Date/time/period |

Function:

To specify date, and/or time, or period.

| | | EDIFACT | GS1 | * | Description |
|---|---|---|---|---|---|
| C507 | DATE/TIME/PERIOD | M | **M** | | |
| 2005 | Date or time or period function code qualifier | M an..3 | **M** | * | 7 = Effective date/time<br>36 = Expiry date<br>137 = Document/message date/time<br>273 = Validity period |
| 2380 | Date or time or period value | C an..35 | **R** | | |
| 2379 | Date or time or period format code | C an..3 | **R** | | 102 = CCYYMMDD<br>203 = CCYYMMDDHHMM<br>718 = CCYYMMDD-CCYYMMDD |

Segment Notes:

This segment is used to specify dates relating to the documents identified in the previous DOC segment.

Example:
DTM+36:19940101:102'

## 5. Segments Layout

Segment number: 76

| | | | | |
|---|---|---|---|---|
| **SG25** | - C | 9999 | - | CNI-DTM-CNT-TSR-MOA-FTX-SG31-SG32-SG33-SG38-SG43-SG50-SG70 |
| **SG50** | - C | 999 | - | GID-HAN-TMP-RNG-MOA-PIA-FTX-SG51-GDS-SG52-SG53-SG54-SG55-SG56-SG61-SG65 |
| **SG61** | - C | 999 | - | SGP |
| **SGP** | - M | 1 | - | Split goods placement |

Function:

To specify the placement of goods in relation to equipment.

| | | EDIFACT | GS1 | * | Description |
|---|---|---|---|---|---|
| C237 | EQUIPMENT IDENTIFICATION | M | **M** | | |
| 8260 | Equipment identifier | C an..17 | **R** | | The value in DE 8260 indicates the identity number of the equipment in/on which the goods item is transported. |
| 1131 | Code list identification code | C an..17 | **O** | | |
| 3055 | Code list responsible agency code | C an..3 | **D** | | |
| 3207 | Country name code | C an..3 | **O** | | ISO 3166 two alpha code |
| 7224 | Package quantity | C n..8 | **O** | | |

Segment Notes:

This segment is used to specify the placement of the goods item within the equipment used for its transportation.

Example:
SGP+AS-12388'

## 5. Segments Layout

Segment number: 77

| | | | |
|---|---|---|---|
| **SG25** | - C | 9999 - | CNI-DTM-CNT-TSR-MOA-FTX-SG31-SG32-SG33-SG38-SG43-SG50-SG70 |
| **SG50** | - C | 999 - | GID-HAN-TMP-RNG-MOA-PIA-FTX-SG51-GDS-SG52-SG53-SG54-SG55-SG56-SG61-SG65 |
| **SG65** | - C | 99 - | DGS-FTX-SG66-SG67 |
| **DGS** | - M | 1 - | Dangerous goods |

Function:

To identify dangerous goods.

| | | EDIFACT | GS1 | * | Description |
|---|---|---|---|---|---|
| 8273 | Dangerous goods regulations code | C an..3 | **O** | | ADR = European agreement regarding the total carriage of dangerous goods<br>CFR = 49 code of federal regulations<br>RID = Rail/road dangerous goods book (RID) |
| C205 | HAZARD CODE | C | **O** | | |
| 8351 | Hazard identification code | M an..7 | **M** | | Classification according ADR/RID rules |
| 8078 | Additional hazard classification identifier | C an..7 | **O** | | Additional according ADR/RID rules |
| 8092 | Hazard code version identifier | C an..10 | **O** | | |
| C234 | UNDG INFORMATION | C | **O** | | |
| 7124 | United Nations Dangerous Goods (UNDG) identifier | C n4 | **O** | | |
| 7088 | Dangerous goods flashpoint value | C an..8 | **O** | | Declaration of the flashpoint. |
| C223 | DANGEROUS GOODS SHIPMENT FLASHPOINT | C | **O** | | |
| 7106 | Shipment flashpoint value | C n3 | **O** | | |
| 6411 | Measurement unit code | C an..3 | **O** | | CEL = degree celsius |
| 8339 | Packaging danger level code | C an..3 | **O** | | 1 = Great danger<br>2 = Medium danger<br>3 = Minor danger |
| 8364 | Emergency procedure for ships identifier | C an..6 | **O** | | Only for emergency procedure on ships. |
| 8410 | Hazard medical first aid guide identifier | C an..4 | **O** | | |
| 8126 | Transport emergency card identifier | C an..10 | **O** | | TREM card number according ADR. |
| C235 | HAZARD IDENTIFICATION PLACARD DETAILS | C | **O** | | |
| 8158 | Orange hazard placard upper part identifier | C an..4 | **O** | | Danger signs upper part. |
| 8186 | Orange hazard placard lower part identifier | C an4 | **O** | | Danger signs lower part. |
| C236 | DANGEROUS GOODS LABEL | C | **O** | | According ADR, FID, IMDG-code, IATA-DGR. |
| 8246 | Dangerous goods marking identifier | C an..4 | **O** | | Number of dangerous goods document primary hazard. |
| 8246 | Dangerous goods marking identifier | C an..4 | **O** | | Number of dangerous goods document secondary hazard. |

## 5. Segments Layout

Segment number: 77

| | | EDIFACT | GS1 | * | Description |
|---|---|---|---|---|---|
| 8246 | Dangerous goods marking identifier | C an..4 | **O** | | |
| 8255 | Packing instruction type code | C an..3 | **O** | | |
| 8325 | Hazardous means of transport category code | C an..3 | **O** | | Only used by air carrier. |
| 8211 | Hazardous cargo transport authorisation code | C an..3 | **O** | | |

Segment Notes:

This segment is used to indicate whether the current goods item is considered a dangerous good.

Example:
DGS+ADR+3B+1178+021:CEL'

## 5. Segments Layout

Segment number: 78

| | | | |
|---|---|---|---|
| **SG25** | - C | 9999 - | CNI-DTM-CNT-TSR-MOA-FTX-SG31-SG32-SG33-SG38-SG43-SG50-SG70 |
| **SG50** | - C | 999 - | GID-HAN-TMP-RNG-MOA-PIA-FTX-SG51-GDS-SG52-SG53-SG54-SG55-SG56-SG61-SG65 |
| **SG65** | - C | 99 - | DGS-FTX-SG66-SG67 |
| **FTX** | - C | 99 - | Free text |

Function:

To provide free form or coded text information.

| | | EDIFACT | GS1 | * | Description |
|---|---|---|---|---|---|
| 4451 | Text subject code qualifier | M an..3 | **M** | | AAC = Dangerous goods additional information<br>AAD = Dangerous goods, technical name |
| 4453 | Free text function code | C an..3 | **O** | | 1 = Text for subsequent use |
| C107 | TEXT REFERENCE | C | **D** | | This composite is only used when trading partners have agreed to use mutually defined code values. |
| 4441 | Free text value code | M an..17 | **M** | | |
| 1131 | Code list identification code | C an..17 | **O** | | |
| 3055 | Code list responsible agency code | C an..3 | **D** | | 89 = Assigned by distributor<br>90 = Assigned by manufacturer<br>91 = Assigned by supplier or supplier's agent<br>92 = Assigned by buyer or buyer's agent |
| C108 | TEXT LITERAL | C | **D** | | This composite is only used if coded text can not be used. |
| 4440 | Free text value | M an..512 | **M** | | |
| 4440 | Free text value | C an..512 | **O** | | |
| 4440 | Free text value | C an..512 | **O** | | |
| 4440 | Free text value | C an..512 | **O** | | |
| 4440 | Free text value | C an..512 | **O** | | |
| 3453 | Language name code | C an..3 | **D** | | ISO 639 two alpha code<br>This data element is only used when non coded free text has been provided in data element C108. |
| 4447 | Free text format code | C an..3 | **N** | | |

Segment Notes:

This segment is used to specify any additional information required for the dangerous goods.
Use of this segment in free form is not recommended since it may inhibit automatic processing of the Forwarding and Consolidation Summary. Coded references to standard texts is an available functionality which enables automatic processing and reduces transmission overheads. Standard texts should be mutually defined between trading partners and can be used to cover legal or other requirements.

Example:
FTX+AAC+++DIETHYL ACETALDEHYDE'

## 5. Segments Layout

Segment number: 79

| | | | |
|---|---|---|---|
| **SG25** | - C | 9999 - | CNI-DTM-CNT-TSR-MOA-FTX-SG31-SG32-SG33-SG38-SG43-SG50-SG70 |
| **SG50** | - C | 999 - | GID-HAN-TMP-RNG-MOA-PIA-FTX-SG51-GDS-SG52-SG53-SG54-SG55-SG56-SG61-SG65 |
| **SG65** | - C | 99 - | DGS-FTX-SG66-SG67 |
| **SG66** | - C | 9 - | CTA-COM |
| **CTA** | - M | 1 - | Contact information |

Function:

To identify a person or a department to whom communication should be directed.

| | | EDIFACT | GS1 | * | Description |
|---|---|---|---|---|---|
| 3139 | Contact function code | C an..3 | **R** | | HE = Emergency dangerous goods contact<br>HG = Dangerous goods contact |
| C056 | DEPARTMENT OR EMPLOYEE DETAILS | C | **O** | | |
| 3413 | Department or employee name code | C an..17 | **O** | | |
| 3412 | Department or employee name | C an..35 | **O** | | |

Segment Notes:

This segment is used to specify a contact name relating to the dangerous goods identified in the DGS segment.

Example:
CTA+HG+:J REEVES'

## 5. Segments Layout

Segment number: 80

| | | | | |
|---|---|---|---|---|
| **SG25** | - C | 9999 | - | CNI-DTM-CNT-TSR-MOA-FTX-SG31-SG32-SG33-SG38-SG43-SG50-SG70 |
| **SG50** | - C | 999 | - | GID-HAN-TMP-RNG-MOA-PIA-FTX-SG51-GDS-SG52-SG53-SG54-SG55-SG56-SG61-SG65 |
| **SG65** | - C | 99 | - | DGS-FTX-SG66-SG67 |
| **SG66** | - C | 9 | - | CTA-COM |
| **COM** | - C | 9 | - | Communication contact |

Function:

To identify a communication number of a department or a person to whom communication should be directed.

| | | EDIFACT | GS1 | * | Description |
|---|---|---|---|---|---|
| C076 | COMMUNICATION CONTACT | M | **M** | | |
| 3148 | Communication address identifier | M an..512 | **M** | | |
| 3155 | Communication address code qualifier | M an..3 | **M** | | EM = Electronic mail<br>TE = Telephone<br>AO = Uniform Resource Location (URL) |

Segment Notes:

This segment identifies the communications number and type of communications for the person or department identified in the previous CTA segment.

Example:
COM+0033148759632:TE'

## 5. Segments Layout

Segment number: 81

| | | | |
|---|---|---|---|
| **SG25** | - C | 9999 - | CNI-DTM-CNT-TSR-MOA-FTX-SG31-SG32-SG33-SG38-SG43-SG50-SG70 |
| **SG50** | - C | 999 - | GID-HAN-TMP-RNG-MOA-PIA-FTX-SG51-GDS-SG52-SG53-SG54-SG55-SG56-SG61-SG65 |
| **SG65** | - C | 99 - | DGS-FTX-SG66-SG67 |
| **SG67** | - C | 9 - | MEA-EQN |
| **MEA** | - M | 1 - | Measurements |

Function:

To specify physical measurements, including dimension tolerances, weights and counts.

| | | EDIFACT | GS1 | * | Description |
|---|---|---|---|---|---|
| 6311 | Measurement purpose code qualifier | M an..3 | **M** | | AAE = Measurement |
| C502 | MEASUREMENT DETAILS | C | **A** | | |
| 6313 | Measured attribute code | C an..3 | **A** | | G = Gross weight |
| 6321 | Measurement significance code | C an..3 | **O** | | 3 = Approximately<br>4 = Equal to |
| 6155 | Non-discrete measurement name code | C an..17 | **N** | | |
| 6154 | Non-discrete measurement name | C an..70 | **N** | | |
| C174 | VALUE/RANGE | C | **R** | | |
| 6411 | Measurement unit code | M an..3 | **M** | | KGM = kilogram<br>LTR = litre |
| 6314 | Measurement value | C an..18 | **O** | | |
| 6162 | Range minimum value | C n..18 | **O** | | |
| 6152 | Range maximum value | C n..18 | **N** | | |
| 6432 | Significant digits quantity | C n..2 | **O** | | |
| 7383 | Surface or layer code | C an..3 | **N** | | |

Segment Notes:

This segment is used to indicate a measurement of the current dangerous goods item.

Example:
MEA+AAE+G:4+LTR:500'

## 5. Segments Layout

Segment number: 82

| | | | | |
|---|---|---|---|---|
| **SG25** | - C | 9999 | - | CNI-DTM-CNT-TSR-MOA-FTX-SG31-SG32-SG33-SG38-SG43-SG50-SG70 |
| **SG50** | - C | 999 | - | GID-HAN-TMP-RNG-MOA-PIA-FTX-SG51-GDS-SG52-SG53-SG54-SG55-SG56-SG61-SG65 |
| **SG65** | - C | 99 | - | DGS-FTX-SG66-SG67 |
| **SG67** | - C | 9 | - | MEA-EQN |
| **EQN** | - C | 1 | - | Number of units |

Function:

To specify the number of units.

| | | EDIFACT | GS1 | * | Description |
|---|---|---|---|---|---|
| C523 | NUMBER OF UNIT DETAILS | M | **M** | | |
| 6350 | Units quantity | C n..15 | **R** | | |
| 6353 | Unit type code qualifier | C an..3 | **N** | | |

Segment Notes:

This segment is used to indicate the number of units to which the dangerous goods measurements apply.

Example:
EQN+1'

## 5. Segments Layout

Segment number: 83

| | | | |
|---|---|---|---|
| **SG25** | - C | 9999 - | CNI-DTM-CNT-TSR-MOA-FTX-SG31-SG32-SG33-SG38-SG43-SG50-SG70 |
| **SG70** | - C | 999 - | EQD-EQN-MEA-DIM-SEL-SG72 |
| **EQD** | - M | 1 - | Equipment details |

Function:

To identify a unit of equipment.

| | | EDIFACT | GS1 | * | Description |
|---|---|---|---|---|---|
| 8053 | Equipment type code qualifier | M an..3 | **M** | | CN = Container<br>PA = Pallet<br>UL = ULD (Unit load device)<br>BPN = Box pallet non exchangeable<br>EFP = Exchangeable EUR flat pallet |
| C237 | EQUIPMENT IDENTIFICATION | C | **A** | | |
| 8260 | Equipment identifier | C an..17 | **A** | | The positioning of goods items within equipment in a consignment is controlled through a link with the SGP segment using the DE 8260. DE 8260 in the EQD segment should have the same value as that specified in the SGP segment (DE 8260) in the applicable goods item group to establish the link. |
| 1131 | Code list identification code | C an..17 | **O** | | |
| 3055 | Code list responsible agency code | C an..3 | **D** | | 9 = GS1 |
| 3207 | Country name code | C an..3 | **O** | | |
| C224 | EQUIPMENT SIZE AND TYPE | C | **O** | | |
| 8155 | Equipment size and type description code | C an..10 | **O** | | 6 = Pressurized tank<br>21 = Container IC 20 ft. |
| 1131 | Code list identification code | C an..17 | **O** | | |
| 3055 | Code list responsible agency code | C an..3 | **D** | | |
| 8154 | Equipment size and type description | C an..35 | **O** | | |
| 8077 | Equipment supplier code | C an..3 | **O** | | 1 = Shipper supplied<br>2 = Carrier supplied |
| 8249 | Equipment status code | C an..3 | **O** | | |
| 8169 | Full or empty indicator code | C an..3 | **O** | | 4 = Empty<br>5 = Full |

Segment Notes:

This segment is used to indicate the units of equipment which will be used to transport the current consignment.

Example:
EQD+UL+45223'

## 5. Segments Layout

Segment number: 84

| | | | | |
|---|---|---|---|---|
| **SG25** | - C | 9999 | - | CNI-DTM-CNT-TSR-MOA-FTX-SG31-SG32-SG33-SG38-SG43-SG50-SG70 |
| **SG70** | - C | 999 | - | EQD-EQN-MEA-DIM-SEL-SG72 |
| **EQN** | - C | 1 | - | Number of units |

Function:

To specify the number of units.

| | | EDIFACT | GS1 | * | Description |
|---|---|---|---|---|---|
| C523 | NUMBER OF UNIT DETAILS | M | **M** | | |
| 6350 | Units quantity | C n..15 | **R** | | |
| 6353 | Unit type code qualifier | C an..3 | **N** | | |

Segment Notes:

This segment is used to specify the number of pieces of equipment required.

Example:
EQN+10'

## 5. Segments Layout

Segment number: 85

| | | | |
|---|---|---|---|
| **SG25** | - C | 9999 - | CNI-DTM-CNT-TSR-MOA-FTX-SG31-SG32-SG33-SG38-SG43-SG50-SG70 |
| **SG70** | - C | 999 - | EQD-EQN-MEA-DIM-SEL-SG72 |
| **MEA** | - C | 9 - | Measurements |

Function:

To specify physical measurements, including dimension tolerances, weights and counts.

| | | EDIFACT | GS1 | * | Description |
|---|---|---|---|---|---|
| 6311 | Measurement purpose code qualifier | M an..3 | **M** | | AAE = Measurement |
| C502 | MEASUREMENT DETAILS | C | **A** | | |
| 6313 | Measured attribute code | C an..3 | **A** | | G = Gross weight<br>T = Tare weight |
| 6321 | Measurement significance code | C an..3 | **O** | | 3 = Approximately<br>4 = Equal to |
| 6155 | Non-discrete measurement name code | C an..17 | **O** | | |
| 6154 | Non-discrete measurement name | C an..70 | **N** | | |
| C174 | VALUE/RANGE | C | **R** | | |
| 6411 | Measurement unit code | M an..3 | **M** | | KGM = kilogram<br>TNE = tonne (metric ton) |
| 6314 | Measurement value | C an..18 | **O** | | |
| 6162 | Range minimum value | C n..18 | **N** | | |
| 6152 | Range maximum value | C n..18 | **N** | | |
| 6432 | Significant digits quantity | C n..2 | **N** | | |
| 7383 | Surface or layer code | C an..3 | **N** | | |

Segment Notes:

This segment is used to specify the physical dimensions of the equipment identified in the preceding EQD segment.

Example:
MEA+AAE+G+TNE:5622'

## 5. Segments Layout

Segment number: 86

| | | | |
|---|---|---|---|
| **SG25** | - C | 9999 - | CNI-DTM-CNT-TSR-MOA-FTX-SG31-SG32-SG33-SG38-SG43-SG50-SG70 |
| **SG70** | - C | 999 - | EQD-EQN-MEA-DIM-SEL-SG72 |
| **DIM** | - C | 9 - | Dimensions |

Function:

To specify dimensions.

| | | EDIFACT | GS1 | * | Description |
|---|---|---|---|---|---|
| 6145 | Dimension type code qualifier | M an..3 | **M** | | 1 = Gross dimensions |
| C211 | DIMENSIONS | M | **M** | | |
| 6411 | Measurement unit code | M an..3 | **M** | | CMT = centimetre<br>MTR = metre |
| 6168 | Length dimension value | C n..15 | **O** | | |
| 6140 | Width dimension value | C n..15 | **O** | | |
| 6008 | Height dimension value | C n..15 | **O** | | |

Segment Notes:

This segment is used to indicate the dimensions of the equipment identified in the EQD segment.

Example:
DIM+1+CMT:2:2:1'

## 5. Segments Layout

Segment number: 87

| | | | |
|---|---|---|---|
| **SG25** | - C | 9999 - | CNI-DTM-CNT-TSR-MOA-FTX-SG31-SG32-SG33-SG38-SG43-SG50-SG70 |
| **SG70** | - C | 999 - | EQD-EQN-MEA-DIM-SEL-SG72 |
| **SEL** | - C | 99 - | Seal number |

Function:

To specify the seal number or a range of seal numbers.

| | | EDIFACT | GS1 | * | Description |
|---|---|---|---|---|---|
| 9308 | Seal identifier | C an..35 | **R** | | |
| C215 | SEAL ISSUER | C | **R** | | |
| 9303 | Sealing party name code | C an..3 | **R** | | CA = Carrier<br>CU = Customs<br>SH = Shipper |
| 1131 | Code list identification code | C an..17 | **O** | | |
| 3055 | Code list responsible agency code | C an..3 | **D** | | |
| 9302 | Sealing party name | C an..35 | **O** | | |
| 4517 | Seal condition code | C an..3 | **O** | | |
| C208 | IDENTITY NUMBER RANGE | C | **N** | | |
| 7402 | Object identifier | M an..35 | | | |
| 7402 | Object identifier | C an..35 | | | |

Segment Notes:

This segment is used to specify a seal number, and the party applying the seal, for the equipment identified in the EQD segment.

Example:
SEL+96753+SH'

Dependency Notes:
The use of the SEL segment in the segment group 21 respectively 70 is recommended. Only if customs seals are involved in particular transport environments such as bonded goods the SEL segment in the segment group 33 should be used.

## 5. Segments Layout

Segment number: 88

| | | | |
|---|---|---|---|
| **SG25** | - C | 9999 - | CNI-DTM-CNT-TSR-MOA-FTX-SG31-SG32-SG33-SG38-SG43-SG50-SG70 |
| **SG70** | - C | 999 - | EQD-EQN-MEA-DIM-SEL-SG72 |
| **SG72** | - C | 9 - | NAD |
| **NAD** | - M | 1 - | Name and address |

Function:

To specify the name/address and their related function, either by C082 only and/or unstructured by C058 or structured by C080 thru 3207.

| | | EDIFACT | GS1 | * | Description |
|---|---|---|---|---|---|
| 3035 | Party function code qualifier | M an..3 | **M** | | CK = Empty equipment despatch party<br>CR = Empty equipment return party |
| C082 | PARTY IDENTIFICATION DETAILS | C | **A** | | |
| 3039 | Party identifier | M an..35 | **M** | | GLN - Format n13<br>For identification of parties it is recommended to use GLN - Format n13. |
| 1131 | Code list identification code | C an..17 | **N** | | |
| 3055 | Code list responsible agency code | C an..3 | **R** | | 9 = GS1 |
| C058 | NAME AND ADDRESS | C | **O** | | This composite may only be used to fulfill the requirements of directive 2003/58/EC, article 4. |
| 3124 | Name and address description | M an..35 | **M** | | |
| 3124 | Name and address description | C an..35 | **O** | | |
| 3124 | Name and address description | C an..35 | **O** | | |
| 3124 | Name and address description | C an..35 | **O** | | |
| 3124 | Name and address description | C an..35 | **O** | | |
| C080 | PARTY NAME | C | **D** | | |
| 3036 | Party name | M an..35 | **M** | | Party Name in clear text. |
| 3036 | Party name | C an..35 | **O** | | |
| 3036 | Party name | C an..35 | **O** | | |
| 3036 | Party name | C an..35 | **O** | | |
| 3036 | Party name | C an..35 | **O** | | |
| 3045 | Party name format code | C an..3 | **O** | | |
| C059 | STREET | C | **D** | | |
| 3042 | Street and number or post office box identifier | M an..35 | **M** | | Building Name/Number and Street |
| 3042 | Street and number or post office box identifier | C an..35 | **O** | | Name and/or P.O. Box |
| 3042 | Street and number or post office box identifier | C an..35 | **O** | | |
| 3042 | Street and number or post office box identifier | C an..35 | **O** | | |
| 3164 | City name | C an..35 | **D** | | City/Town, clear text. |
| C819 | COUNTRY SUB-ENTITY DETAILS | C | **D** | | |
| 3229 | Country sub-entity name code | C an..9 | **O** | | |

## 5. Segments Layout

Segment number: 88

| | | EDIFACT | GS1 | * | Description |
|---|---|---|---|---|---|
| 1131 | Code list identification code | C an..17 | **O** | | |
| 3055 | Code list responsible agency code | C an..3 | **O** | | |
| 3228 | Country sub-entity name | C an..70 | **O** | | County/State, clear text. |
| 3251 | Postal identification code | C an..17 | **D** | | Postal Code |
| 3207 | Country name code | C an..3 | **D** | | ISO 3166 two alpha code |

Segment Notes:

This segment is used to specify pick up or drop off parties for the equipment specified in the EQD segment.

Example:
NAD+CK+3323456007896::9'

Dependency Notes:
The following composites and data elements are only used when a coded name and address can not be used.
The affected composites and data elements are as follows:
C080 - C059 - 3164 - C819 - 3251 - 3207

## 5. Segments Layout

Segment number: 89

**UNT** - M 1 - Message trailer

Function:

To end and check the completeness of a message.

Notes:
1. 0062, the value shall be identical to the value in 0062 in the corresponding UNH segment.

| | | EDIFACT | GS1 | * | Description |
|---|---|---|---|---|---|
| 0074 | Number of segments in a message | M n..10 | **M** | | The total number of segments in the message is detailed here. |
| 0062 | Message reference number | M an..14 | **M** | | The message reference numbered detailed here should equal the one specified in the UNH segment. |

Segment Notes:

This segment is a mandatory UN/EDIFACT segment. It must always be the last segment in the message.

Example:
UNT+89+ME000001'

## 6. Examples

The following is an example of a forwarding and consolidation summary transport instruction message from a consignor identified by GLN 5412345123450 to a carrier identified with GLN 5411234512300. The message is identified by the number 9952 and is dated the 1st of March 2002.

The consolidation contains the following consignments;

| Shipment Ref No | Delivery Date | Consignee | Goods Item | Delivery Party |
|---|---|---|---|---|
| 221 | 2002/03/08 | 5087654111110 | 4 Cartons of Food Stuffs | 5087654525252 |
| 281 | 2002/03/08 | | 12 Cartons of Food Stuffs<br>8 Cartons of Detergents | 5087654525269 |
| 140 | 2002/03/08 | | 6 Cartons of Food Stuffs | 5087654511118 |
| 201 | 2002/03/08 | 5480011222229 | 6 Cartons of Food Stuffs | 5480011000018 |
| 266 | 2002/03/08 | | 120 Cartons of Food Stuffs | 5480011000025 |

| | |
|---|---|
| UNH+ME000001+IFCSUM:D:01B:UN:EAN004' | Message header |
| BGM+610+9952+9' | IFCSUM message number 9952 |
| DTM+137:20020301:102' | Message date |
| CNT+10:5' | There are 5 consignments consolidated in the message |
| RFF+CU:TI1284' | Consignors reference number for the message is TI1284 |
| TDT+20++30+31' | Main carriage transport for the consolidated consignments is to be a truck |
| NAD+CZ+5412345123450::9' | The consignor is identified by GLN 5412345123450 |
| NAD+CA+5411234512300::9' | The carrier is identified by GLN 5411234512300 |
| CNI+1+221' | The first consignment to be consolidated has a shipment reference number of 221 |
| DTM+2:20020308:102' | The delivery date requested is the 8th of March 2002 |
| CNT+11:4' | The total number of packages in the consignment is 4 |
| NAD+CN+5087654111110::9' | Consignee is identified by GLN 5087654111110 |
| GID+1+4:CT' | The goods item in consignment number 1 is 4 cartons |
| FTX+AAA+++FOODS STUFFS' | of food stuffs |
| NAD+DP+5087654525252::9' | Delivery party is identified by GLN 5087654525252 |
| CNI+2+281' | The second consignment to be consolidated has a shipment reference number of 281 |

| | |
|---|---|
| DTM+2:20020308:102' | The delivery date requested is the 8th of March 2002 |
| CNT+11:20' | The total number of packages in the consignment is 20 |
| NAD+CN+5087654111110::9' | Consignee is identified by GLN 5087654111110 |
| GID+1+12:CT' | The first goods item in consignment number 2 is 12 cartons |
| FTX+AAA+++FOODS STUFFS' | of food stuffs |
| NAD+DP+5087654525269::9' | Delivery party is identified by GLN 5087654525269 |
| GID+2+8:CT' | The second goods item in consignment number 2 is 8 cartons |
| FTX+AAA+++DETERGENTS' | of detergents |
| NAD+DP+5087654525269::9' | Delivery party is identified by GLN 5087654525269 |
| CNI+3+140' | The third consignment to be consolidated has a shipment reference number of 140 |
| DTM+2:20020308:102' | The delivery date requested is the 8th of March 2002 |
| CNT+11:6' | The total number of packages in the consignment is 6 |
| NAD+CN+5087654111110::9' | Consignee is identified by GLN 5087654111110 |
| GID+1+6:CT' | The first goods item in consignment number 3 is 6 cartons |
| FTX+AAA+++FOODS STUFFS' | of food stuffs |
| NAD+DP+5087654111118::9' | Delivery party is identified by GLN 5087654111118 |
| CNI+4+204' | The fourth consignment to be consolidated has a shipment reference number of 204 |
| DTM+2:20020308:102' | The delivery date requested is the 8th of March 2002 |
| CNT+11:6' | The total number of packages in the consignment is 6 |
| NAD+CN+5480011222229::9' | Consignee is identified by GLN 5480011222229 |
| GID+1+6:CT' | The first goods item in consignment number 4 is 6 cartons |
| FTX+AAA+++FOODS STUFFS' | of food stuffs |
| NAD+DP+5480011000018::9' | Delivery party is identified by GLN 5480011000018 |
| CNI+5+266' | The fifth consignment to be consolidated has a shipment reference number of 266 |

**6. Examples**

| | |
|---|---|
| DTM+2:20020308:102' | The delivery date requested is the 8th of March 2002 |
| CNT+11:120' | The total number of packages in the consignment is 120 |
| NAD+CN+5480011222229::9' | Consignee is identified by GLN 5480011222229 |
| GID+1+120:CT' | The first goods item in consignment number 5 is 120 cartons |
| FTX+AAA+++FOODS STUFFS' | of food stuffs |
| NAD+DP+5480011000025::9' | Delivery party is identified by GLN 5480011000025 |
| UNT+47+ME000001' | Total number of segments in the message equals 47 |

Note :
The EDI interchange will include the UNB..UNZ segments and, if applicable, the UNG..UNE segments (see part I section 5.7).